OPEN BOOKMARKS TO ACCESS SECTIONS LISTED IN THE TABLE OF CONTENTS.

RIVERSIDE-CORONA FEEDER PROJECT

FINAL SUPPLEMENTAL ENVIRONMENTAL IMPACT REPORT
SCH No. 2003031121

Prepared for:

Western Municipal Water District
14205 Meridian Parkway
Riverside, CA 92518
Contact: Jack Safely
Director of Water Resources
Telephone Number: (951) 571-7100

U.S. Department of Interior,
Bureau of Reclamation
27708 Jefferson Ave., #202
Temecula, CA 92593
Contact: Amy Witherall
Water Resources Planner
Telephone Number: (951) 695-5310

Prepared by:

Albert A. WEBB Associates
3788 McCray Street, Riverside, CA 92506
Contact: Cathy Perring, Principal Environmental Planner
(951) 686-1070

February 2012

TABLE OF CONTENTS

1.0 INTRODUCTION

Introduction and Background to the Final SEIR/EIS 1-1

Relationship to the SEIR 1-1
Corrections, Errata, and Changes from Draft to Final 1-1
Public Review Summary 1-18
List of Persons, Organizations, and Public Agencies
that Commented on the Draft SEIR/EIS 1-19

2.0 RESPONSE TO COMMENTS

Federal Agencies
U.S. EPA, 4/5/11 2-3
National Park Service, Partnerships Program, PWR, 3/17/11 (no comment via email) ..... N/A

State Agencies
Caltrans, 1/26/11 2-29
State Department of Water Resources, 2/28/11 2-31
Department of Toxic Substance Control, 3/3/11 2-33
State Clearinghouse, Governor's Office of Planning and Research, 3/8/11 2-36
California Department of Fish & Game, 3/3/11 2-37

Regional and Local Agencies
Riverside County Fire Department, 1/26/11 2-62
Riverside County Flood Control and Water Conservation District, 1/26/11 2-63
Orange County Public Works Department, 2/28/11 2-64
Riverside County Transportation and Land Management Department, 3/8/11 2-65
City of Redlands, 3/7/11 2-66
City of San Bernardino Planning Division, 2/16/11 2-78
City of San Bernardino Municipal Water Department, 3/1/11 2-79
City of Fontana, 2/15/11 (no comment) 2-86
Metropolitan Water District of southern California, 3/22/11 2-87
Riverside County Airport Land Use Commission, 3/8/11 2-89
Orange County Water District, 3/8/11 2-93
City of Riverside, Community Development Department, Planning Division 3/8/11 2-94
Southern California Air Quality Management District, 3/8/11 2-112
County of San Bernardino, Department of Public Works, 3/29/11 2-126

Other Interested Parties
Pechanga, Temecula Band of Luiseno Indians, 3/8/11 2-129

Comment Letters 2.0-141

3.0 SEIR/EIS Notices and Distribution Information
4.0 FINAL ACTIONS – CEQA/NEPA
5.0 MITIGATION MONITORING AND REPORTING PROGRAM
6.0 DRAFT SEIR/EIS (as Annotated August 2011)

Section 1 Introduction and Background to the Final SEIR/EIS

The Riverside-Corona Feeder Project Supplemental Environmental Impact Report/Environmental Impact Statement ("SEIR/EIS") is a joint document prepared in compliance with the California Environmental Quality Act ("CEQA" (State *CEQA Guidelines* Article 14, Section 15220)) and National Environmental Protection Act ("NEPA") prepared by Western Municipal Water District (hereinafter, "WMWD," Lead Agency under CEQA) and the U.S. Department of Interior, Bureau of Reclamation (hereinafter, the "BOR," Lead Agency under NEPA).

The Final SEIR, as required pursuant to State *CEQA Guidelines* Sections 15089 and 15132, includes the Draft SEIR or a revision thereof, comments, and recommendations received on the Draft SEIR, a list of persons, organizations, and public agencies commenting on the Draft SEIR, and the responses of the Lead Agency to significant environmental points raised in the review and consultation process. A Mitigation Monitoring and Reporting Program ("MMRP") is also included to ensure compliance during project implementation (Public Resources Code Section 21081.6, State *CEQA Guidelines* Section 15097).

The Final EIS is required by NEPA and the Council on Environmental Quality ("CEQ") was established as a part of the Act to regulate its implementation as specified in Code of Federal Regulations 40 (40 CFR) Parts 1500–1508. Final environmental impact statements must respond to comments received regarding the draft EIS and discuss at appropriate points in the final statement, any responsible opposing view which was not adequately discussed in the draft EIS and shall indicate the agency's response to the issues raised. (Section 1502.9 (b)) The Riverside-Corona Feeder Project Final EIS has been prepared pursuant to Section 1503.4 of the CEQ Regulations for Implementing NEPA.

The information added in the Final SEIR/EIS following distribution of the Draft SEIR/EIS does not constitute "significant new information" pursuant to Section 15088.5 of the State *CEQA Guidelines* because this information does not change the project impacts and/or mitigation measures such that new or more severe environmental impacts result from the Project. The information is added as a result of comments received from responsible agencies, changes in the existing conditions at the site, revised public policies since the Draft SEIR/EIS was written, and minor corrections or clarifications. This additional information merely "clarifies or amplifies or makes insignificant modifications" in the already adequate Supplemental EIR, as is permitted by State *CEQA Guidelines* Section 15088.5(b); and supplements Draft EIS analyses and makes factual corrections, as permitted by CEQ Regulations Section 1503.4(a).

Relationship to the SEIR

Minor changes that clarify or correct minor inaccuracies in the Draft SEIR/EIS appear as revised pages in the *Corrections, Errata, and Changes from Draft to Final* section which follows herein. The Draft SEIR/EIS considered by the Lead Agency has been edited to reflect corrections and responses to comments raised and is included as the "Annotated Draft SEIR/EIS" as part of the final document.

Corrections, Errata, and Changes from Draft to Final

During the preparation and distribution of the Draft SEIR/EIS, two cities were incorporated within Riverside County. The City of Eastvale was incorporated October 1, 2010 and the City of Jurupa Valley was incorporated on July 1, 2011 (see Figures 1-1, Regional Location and 1-2, Realignment Alternative with Additional Connections Preferred Alternative). The portions of this Project identified to transverse unincorporated Riverside County north of the Santa Ana River will now be located within the city boundaries of Jurupa Valley. The analysis and information presented in this SEIR/EIS with respect to this

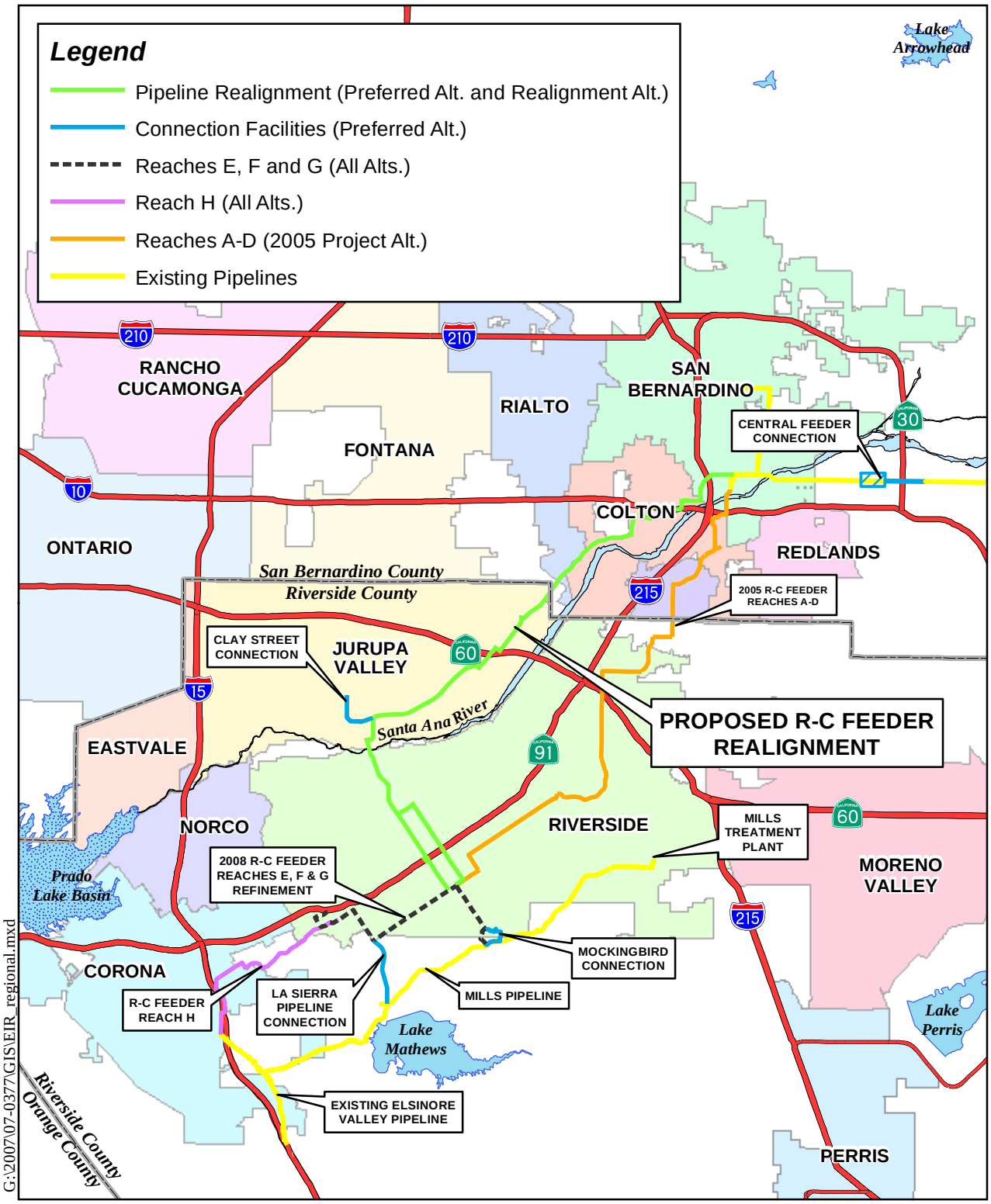

Figure 1-1
Regional Location

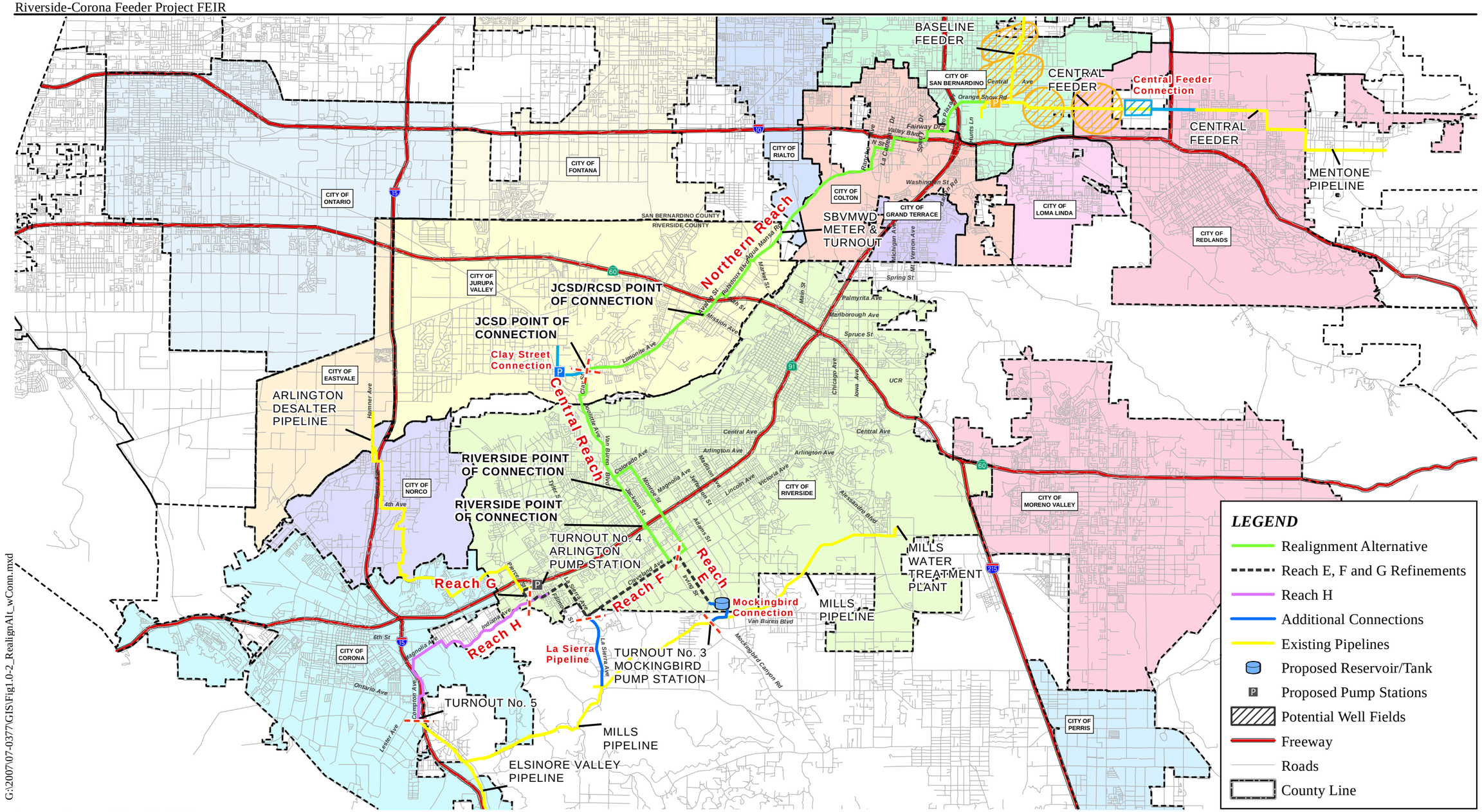

G:\2007\07-0377\GIS\Fig1.0-2_RealignAlt_wConn.mxd

Sources: County of Riverside, 2009;
County of San Bernardino, 2009.

Figure 1-2
Realignment Alternative with Additional Connections
Preferred Alternative

geographic area is still valid and accurate because the new City adopted all County plans, policies, and regulations.

The following Errata summary, which is organized by commenting agency, will present the location and types of additions and changes or corrections made within each section of the Final SEIR/EIS since the Draft was published.

Figures 1 of the Abstract and Figure 1.0-1, Regional Location, were corrected to include the city limit for Redlands and correctly label the city of Loma Linda.

In response to information and clarifications requested in the Environmental Protection Agency letter dated April 5, 2011, the Annotated Draft SEIR/EIS, which is bound with the Responses to Comments to form the Final SEIR/EIS, will be edited as follows:

> Various paragraphs on pages 1.0-1 and 1.0-2:
> The project is proposed to store excess imported water, when it is available, to increase firm water supplies, to improve water quality, and to reduce water costs. The project proposes to manage the groundwater levels through the construction of groundwater wells in the San Bernardino Basin Area and pumps to deliver the treated groundwater supply to water users. The project will also include a new potable water pipeline system to connect to existing water facilities in ~~serve~~ portions of San Bernardino and Riverside counties. This system of storage, extraction, treatment, and distribution will improve the reliability of WMWD's water supply through the managed storage and distribution of excess imported water and reduce possible water shortages during dry years through reduced dependence on imported water during dry year conditions. To achieve this purpose, the RCF project replenishes excess State Water Project (SWP) water supplied by Metropolitan Water District of Southern California (MWD) into the San Bernardino Groundwater Basin, and extracts, treats, and moves water throughout the region by way of interconnections between local groundwater basins . . .
>
> The realignment evaluated by this SEIR also allows WMWD to address the reduced potential for California State Water Project water availability for groundwater replenishment purposes and includes connections to the Jurupa Community Services District's pipeline facilities, the San Bernardino Valley Municipal Water District's Inland and Central Feeders, and other existing WMWD facilities. These connections will facilitate the transportation of potable water from one water agency to another and one groundwater basin to another through the development of multiple interconnected pipelines within the project area. The facilities may also be used to convey local water supplies, once treated, pursuant to rights held by . . .
>
> Various paragraphs on pages 2.0-3, 2.0-4, and 2.0-5:
> The purpose of the RCF is to store excess imported water, when it is available, to increase firm water supplies, to improve water quality, and to reduce water costs. The project proposes to manage the groundwater levels through the construction of groundwater wells and pumps to deliver the treated groundwater supply to water users. The project will also include a new potable water pipeline system to connect to existing water facilities in ~~serve~~ portions of San Bernardino and Riverside counties . . .
>
> RCF infrastructure will allow WMWD to purchase State Water Project water from the Metropolitan Water District of Southern California (MWD) and store that water in the San Bernardino Groundwater Basin Area, and to extract, treat and distribute the water from the Basin Area when it is needed. . . .

The facilities may also be used to convey local potable water supplies pursuant to rights held by the City of Riverside and the Elsinore Valley Municipal Water District and to deliver treated imported water to wholesale customers. If appropriate agreements can be reached, additional native water may at times also be available. The facilities may also be used to obtain and convey native water, once treated, pursuant to rights held by other agencies, such as the City of Riverside, Jurupa Community Services District, Rubidoux Community Services District, the Chino Basin Desalter Authority, San Bernardino Valley Municipal Water District, and Elsinore Valley Municipal Water District. This project will make WMWD less dependent on the direct delivery of water from the Metropolitan Water District of Southern California (MWD).

Page 3.0-23

The Central Feeder Connection consists of approximately 6,350 linear feet of an up to 54-inch diameter pipeline located in the San Bernardino Avenue right-of-way between Alabama Street in unincorporated San Bernardino County and Webster Street in the city of Redlands. (Figure 3.0-8, Central Feeder Connection) Adjacent to the Central Feeder Pipeline are up to five new proposed 350-HP x 2,200-gallons-per-minute (GPM) groundwater production wells, including treatment facilities to meet drinking water standards, within the well field identified on Figure 1.0-1 (exact locations not determined) which will be connected into the San Bernardino Valley Municipal Water District's Central Feeder Pipeline; thereby providing additional means for transporting San Bernardino Groundwater Basin water through regional pipeline facilities that are connected to the Riverside-Corona Feeder project. These five wells are included within the 20 total wells associated with the RCF.

Based on EPA's **Comment 2**, page 4.7-33, MM GWQ 2 shall be revised as follows:

MM GWQ 2 (Revised): To assure that ongoing management of the RCF is coordinated with management of the Basin Area as a whole, monitoring and adaptive management shall be employed.

a) The RCF operations management plan will be developed and tested using the groundwater modeling employed by the Basin Area TAC (or its successor or assignee) on an annual basis. Existing groundwater flow and groundwater quality model(s) shall be used to predict the effects of project operations on groundwater quality. The results of the modeling shall be presented to the BTAC. If the results indicate that the location of pollution plumes will be shifted by project operations such that additional existing 'clean' wells could become contaminated, WMWD shall modify planned operations to avoid the result or otherwise address the modeled situation to the satisfaction of the BTAC. Examples of operational modifications that could be used, are provided in the following table.

b) When a new well is drilled, indicator wells in the vicinity that could be affected by Project operation will be selected to become part of the annual operations management plan. If water quality testing at any indicator wells (which are already tested regularly) suggests that the replenishment and pumping regime of the proposed project operation is causing drinking water quality in a given well to become newly contaminated or to worsen due to the RCF Project~~, exceed state drinking water standards~~, production and/or spreading in the area(s) contributing to the contamination shall cease until a remedy is identified and implemented. ~~adverse affects associated with the project no longer occur.~~ Such remedies may include but not be limited to the following:

Contamination Remedy Examples and Method Priorities

New Wells Drilled for Project Operations		
Treatment Option	First Priority Methods	Secondary Priority Methods
Avoidance	• Move or Avoid Production in a Contaminated Location	• Wellhead treatment
Wellhead Treatment[1]	• Chlorination or ozonation for disinfecting (required for all wells) • Ion Exchange for nitrates and other contaminants • Activated Carbon	• Reverse osmosis
Blending	• If multiple wells in proximity have varying levels of constituents, blending could occur to dilute contaminants to legal levels prior to distribution	
Existing Wells at Risk of Contamination by Project Operations		
Treatment Option	First Priority Method	Secondary Priority Method
Careful Management	• Participate in ongoing conjunctive use management of the Basin so Project is a benefit to Basin health for a safe drinking water supply and for the ecological health of the watershed	• choose alternative production and/or spreading location(s) • produce or spread at a different time of year • install barrier wells
Blending	• If multiple wells in proximity have varying levels of constituents, blending could occur to dilute contaminants to legal levels prior to distribution	
Alternative use of contaminated water	• Could be effective in areas where non-potable system or other non-potable use exists if affected well operator is provided with drinking water quality replacement water from another source	

[1] Other than disinfecting, all other treatment approaches are dependent on the contaminants that need to be removed.

~~*Appropriate Use*. Contaminated water could be utilized for purposes that would allow or require lower water quality standards.~~

- ~~*Blend*. Water that has poor quality can be blended and diluted until water quality standards are achieved.~~
- ~~*Move (Avoid)*. Choose another production and/or spreading area.~~
- ~~*Careful Management*. Operate wells in a manner that will prevent or delay contamination. This may include installation of barrier wells or avoidance of strategies that would result in acceleration of the movement of contaminated water towards existing wells.~~
- ~~*Wellhead Treatment*. Wellhead treatment can be utilized to bring water to acceptable water quality levels.~~

In response to **Comment 4** of the EPA letter page 4.7-4 will be changed in the Final SEIR/EIS, as follows:

> Newmark Plume and Muscoy Plume: The United States Environmental Protection Agency (EPA) has identified and designated two plumes within the identified "Newmark Groundwater Contamination" site, which consists of area-wide groundwater contamination underlying portions of the city of San Bernardino. The two groundwater plumes border Shandin Hills. On the east side of the site, a contaminated groundwater plume extends for 5 miles and is referred to as the Newmark Plume area. On the west side of Shandin Hills is a 4-mile long contaminated groundwater plume known as the Muscoy Plume area. Although the suspected disposal may have occurred as early as the 1940s, the problem was not discovered until a water supply monitoring program was instituted in 1980. The contaminated groundwater contains volatile organic compounds (VOCs) including TCE and PCE. (EPA) Treatment plants are operating to remove VOC contamination. A total of thirteen extraction wells produce on average approximately 26,000 AFY, which is treated at the four treatment plants. (SAWPA, pp. 179–180) At the present time, the performance of the remedies in place results in 100% capture of the contaminants from all three contaminated plumes. The Newmark Groundwater Site has an Institutional control in place to require that all new wells or new operating conditions go through a permitting process to prove that the existing EPA remedies would not be affected.[1]

Page 4.7-25 will be changed in the Final SEIR/EIS:

> . . . The Newmark and Muscoy Operable Units Statement of Work specifies a minimum particle recovery of 85% for the Newmark Plume Front extraction well network and the Muscoy Plume Front extraction well network when these extraction wells are set equivalent to or above the design extraction rates. Results of the particle tracking from the Newmark and Muscoy Plumes show that the RCF Conjunctive Use project would not impact the contamination plumes. At the present time, the performance of the remedies in place results in 100% capture of the contaminants from all three contaminated plumes. The Newmark Groundwater Site has an Institutional control in place to require that all new wells or new operating conditions go through a permitting process to prove that the existing EPA remedies would not be affected.[2]

The City of San Bernardino Municipal Water Department ("Department") letter dated March 1, 2011, requests an additional mitigation measure to provide for relocation or modification of existing Department facilities and for coordination of Project design with the Department where conflicts are identified. The following text shall be added to the Final SEIR/EIS, on pages 2.0-10–11, to clarify that coordination with the City Water Department is also required. It will read:

- **Counties of Riverside and San Bernardino, and Cities of San Bernardino, Colton, Corona, and Rialto**

  a) Encroachment permits will be required to construct the pipeline in roads/rights-of-way. Public Works, Municipal Water Departments and other agencies or departments within the above-listed local governments will require coordination and may require

[1] United States Environmental Protection Agency Region IX, comment letter regarding Draft Environmental Impact Statement for the Riverside-Corona Feeder Project, Bunker Hill Groundwater Basin, San Bernardino and Riverside Counties, California (CEQ #20110017), April 5, 2011.

[2] United States Environmental Protection Agency Region IX, comment letter regarding Draft Environmental Impact Statement for the Riverside-Corona Feeder Project, Bunker Hill Groundwater Basin, San Bernardino and Riverside Counties, California (CEQ #20110017), April 5, 2011.

encroachment permits for any Project facilities encroaching upon facilities or facilities easements owned by the agency.

b) Grading permits will be required by the local jurisdictions wherever construction occurs outside of the road right-of-way.

c) Compliance with all local policies related to cultural resources and tree preservation policies.

The Riverside County Flood Control & Water Conservation District ("RCFC&WCD") letter dated January 26, 2011, requests a correction to a reference from MWD (Metropolitan Water District) to RCFC&WCD in Section 2.0, Introduction, page 2.0-11. Section 2.0, page 2.0-11, will be corrected to read:

- **Riverside County Flood Control and Water Conservation District (RCFC&WCD)**

  a) RCFC&WCD will require coordination and may require encroachment permits for any facilities encroaching upon facilities or facilities easements owned by RCFC&WCD ~~MWD.~~

The State Department of Water Resources ("DWR") letter dated February 28, 2011, states that DWR requires an Encroachment Permit be obtained prior to the start of construction. Section 2.0, page 2.0-12 will be modified to include the following:

- **California Department of Water Resources (DWR)**

  a) DWR will require coordination and an encroachment permit for the crossing of its California Aqueduct, Santa Ana Pipeline near Fairway Drive in the city of Colton.

The Orange County Water District letter dated March 8, 2011, requests clarification on SEIR/EIS statements regarding "future use of recycled water for groundwater basin recharge." To avoid confusion, this language will be removed from Section 3.3, page 3.0-1, and read as follows:

- ...tie into the Chino Desalter Phase 3 expansions to facilitate the connection of WMWD facilities to those that are a part of the Chino Basin Dry-Year Yield Program;
- ~~leave available the opportunity for future use of recycled water for groundwater basin recharge;~~
- Improve groundwater quality;…

The California Fish and Game letter, dated March 3, 2011, results in the following clarifications made in Section 4.3 Biological Resources discussion (p. 4.3-38) and the mitigation measure applicable to least Bell's vireo and southwestern willow flycatcher (**MM Bio 3a**) in San Bernardino County. Recommended changes to **MM Bio 3a** that are acceptable to WMWD and the USBOR are reflected below and will be incorporated into Section 4.3 of the Final SEIR/EIS:

> The least Bell's vireo is a federally-listed and state endangered species that is known to occur within the Santa Ana River (Central Reach) and has some potential to occur in association with southern willow scrub scattered throughout the proposed RCF realignment (Northern Reach). The majority of potentially suitable habitat is associated with the Santa Ana River crossing. The Central Reach traverses federally-designated critical habitat at the Santa Ana River. Potential impacts to least Bell's vireo will be avoided through design considerations. Jack and bore construction will be used for pipeline installation across the Santa Ana River. The temporary or permanent loss of occupied habitat within the Northern Reach would constitute a take of least

Bell's vireo, and would require authorization from USFWS and CDFG. Any take of least Bell's vireo would be expected to be a significant impact prior to mitigation. Compliance with **MM Bio 3a and 3b,** and **MM Bio 5** would reduce potential impacts from the project construction on least Bell's vireo to **less than significant** levels.

The southwestern willow flycatcher is a federally and state-listed endangered species and has some potential to occur in association with riparian forest scattered throughout the proposed RCF realignment (Northern Reach). The majority of potentially suitable habitat is associated with the Santa Ana River crossing (Central Reach). Potential impacts to southwestern willow flycatcher will be avoided through design considerations. Jack and bore construction will be used for pipeline installation across the Santa Ana River. The temporary or permanent loss of occupied habitat within the Northern Reach would constitute a take of southwestern willow flycatcher, and would require authorization from USFWS and CDFG. Any take of southwestern willow flycatcher would be expected to be a significant impact prior to mitigation. With compliance with **MM Bio 3a and 3b** and **MM Bio 5**, impacts would be considered **less than significant**.

MM Bio 3a: Should construction occur during the breeding season for the least Bell's vireo (LBV) or southwestern willow flycatcher (SWWF) (March 15 through September 15), protocol-level surveys shall be conducted prior to construction at the following locations: the Santa Ana River (Reach A or Central Reach), Spring Brook Wash (Reach B), the riparian vegetation along the Mockingbird Canyon alignment (Reach E), potentially suitable habitat in the Northern Reach (as identified in the Glenn Lukos Associates, Inc. 2008 report), and the drainage located south of the Corona Landfill (Reach H); or presence can be assumed. If surveys document the presence of LBV and SWWF, impacts to LBV and SWWF would be mitigated below the level of significance when occupied riparian forest/woodland/scrub is fenced and direct impacts are avoided and construction within 500 feet of occupied habitat occurs only between September 15th and March 15th to avoid indirect impacts to nesting LBV. If avoidance is not feasible, a temporary noise barrier shall be used during construction, at the appropriate location(s), in coordination with CDFG and the USFWS. The noise barrier shall attenuate noise levels to 60 dBA or less, at the edge of breeding habitat. If surveys indicate that these species are not present, this measure will not be required. Additional or alternative measures to avoid or minimize adverse project effects to LBV and SWWF, as identified by the USFWS in Section 7 Consultation and CDFG, shall be implemented. However, if all avoidance measures cannot be implemented such that "take" of LBV and SWWF is avoided, Take Authorization from USFWS through Final Biological Opinion and Incidental Take Statement and from CDFG through issuance of a CESA ITP or compliance with Fish and Game Code Section 2080.1, will be obtained.

MM Bio 4a: Should construction occur during the breeding season for the coastal California gnatcatcher (March 15 through September 15), a protocol-level survey shall be conducted prior to construction at Spring Brook wash (Reach B) and the Northern Reach (within Riverside County as identified in the Glenn Lukos Associates, Inc. 2008 report), in the vicinity of the proposed project; or presence can be assumed. Focused presence/absence surveys consist of either 1) six surveys conducted no less than one week apart between March 15 and June 30 or 2) nine surveys conducted no less than two weeks apart during the remainder of the year. Surveys must be conducted by a biologist who holds the appropriate Section 10(a)(1)(A) permit. Surveys in which the species is not detected are considered valid for one year and should be repeated within one year of work commencing.

If surveys document absence of CAGN no additional avoidance or minimization measures are required. If surveys document the presence of CAGN impacts to CAGN would be mitigated below the level of significance when occupied coastal sage scrub is fenced and direct impacts are avoided

and construction within 500 feet of occupied habitat occurs only between September 1 and February 15 to avoid indirect impacts to nesting CAGN. If avoidance is not feasible, a temporary noise barrier shall be used during construction, at the appropriate location(s), in coordination with CDFG and the USFWS. The noise barrier shall attenuate noise levels to 60 dBA or less at the edge of breeding habitat. Additional or alternative measures to avoid or minimize adverse project effects to CAGN, as identified by the USFWS in Section 7 Consultation, shall be implemented. <u>However, if all avoidance measures cannot be implemented such that "take" of LBV and SWWF is avoided Take Authorization from USFWS through Final Biological Opinion and Incidental Take Statement and from CDFG through issuance of a CESA ITP or compliance with Fish and Game Code Section 2080.1 will be obtained.</u>

In addition, mitigation measure **MM Bio 9**, as seen on page 4.3-45 of the SEIR/EIS, will be modified as follows:

MM Bio 9: A project-wide 1602 Streambed Alteration Agreement prepared in accordance with CDFG requirements shall be secured by WMWD as the jurisdictional delineation warrants and shall include mitigation measures that are sufficient to reduce direct and indirect impacts to riparian habitat to a level below significant. The Agreement may include some or all of the following:

- Avoid impacts where possible by shifting the project location or construction timing.
- Minimize impacts.
- Remove invasive species.
- Purchase off-site habitat credits.
- Create and/or restore natural communities <u>and prepare a monitoring and maintenance plan for these areas</u>.
- Avoid sensitive habitats by placing construction staging areas as far away from them as is feasible.
- Limit construction activity to daylight hours to minimize potential impacts related to artificial lighting.
- Require the presence of a qualified biological monitor during all construction activities that are within or near sensitive habitats and areas that have been identified to host the arroyo toad, least Bell's vireo, southwestern willow flycatcher, coastal California gnatcatcher, Stephens' kangaroo rat, or San Bernardino kangaroo rat.

In response to CDFG's **Comment 5**, mitigation measure **MM Bio 20a** (DEIR, p. 4.3-48) will be revised as follows:

MM Bio 20a: In San Bernardino County within potentially suitable habitat for Delhi sands flower-loving fly (DSF) in the Northern Reach of the project alignment (as identified in the Glenn Lukos Associates, Inc. 2008 report), focused surveys shall be conducted following USFWS protocol by a qualified biologist who holds the appropriate Section 10(a)(1)(A) permit. Presence/absence surveys consist of bi-weekly surveys from August 1 to September 20 for a two-year period within areas of suitable habitat. If surveys document the presence of DSF, impacts to DSF would be mitigated below the level of significance when occupied habitat is fenced, and direct impacts are avoided. If avoidance is not feasible, additional measures to avoid or minimize adverse project effects to DSF and their habitat, as identified by the USFWS in Section 7 Consultation, shall be implemented. The additional measures may include, but not be limited to, some or all of the following:

- Avoid impacts where possible by shifting the project location or construction timing.
- Maintain construction sites in sanitary conditions at all times.
- Avoid sensitive habitats by placing construction staging areas as far away from them as is feasible.
- Place extracted, surplus, suitable Delhi sands in current DSF conservation areas/banks.
- Harvest sands and provide to a habitat bank established for the DSF.

Regarding the CDFG comment on the location and number of new wells, page 3.0-23 of the SEIR/EIR shall be modified as follows:

Central Feeder Connection

The Central Feeder Connection consists of approximately 6,350 linear feet of an up to 54-inch diameter pipeline located in the San Bernardino Avenue right-of-way between Alabama Street in unincorporated San Bernardino County and Webster Street in the city of Redlands. (Figure 3.0-8, Central Feeder Connection) Adjacent to the Central Feeder Pipeline are up to five new proposed 350 HP x 2,200-gallons-per-minute (GPM) groundwater production wells within the well field identified on Figure 1.0-1 (exact locations not determined) into the San Bernardino Valley Municipal Water District's Central Feeder Pipeline; thereby providing additional means for transporting San Bernardino Groundwater Basin water through regional pipeline facilities that are connected to the Riverside-Corona Feeder project. These five wells are included within the 20 total wells associated with the RCF.

In response to CDFG Comment 8, mitigation measure **MM Bio 25** will be added to the SEIR/EIS Biological Resources section, page 4.3-50:

MM Bio 25: Should jack and bore (also known as horizontal directional drilling) techniques be utilized to install the pipeline under CDFG or U.S. Army Corps of Engineers jurisdictional waterways (such as the Santa Ana River), a Frac-Out Contingency Plan (included in Appendix D – Biological Resources of the SEIR/EIS) shall be implemented by the contractor for the duration of drilling activities.

The Pechanga Cultural Resources, Temecula Band of Luiseño Mission Indians (Tribe) letter dated March 8, 2011, requests modifications to various cultural resources mitigations measures. Recommended changes to mitigation measures that are acceptable to WMWD and the USBOR are reflected below and will be incorporated into Section 4.4, page 4.4-10 of the Final SEIR/EIS:

MM Cult 1: (CULT-3) In order to reduce potential significant impacts to historic and non-Native American archaeological and historic resources, full-time archaeological monitoring during excavations shall be conducted in sensitive areas (e.g., near the Santa Ana River crossing, Mockingbird Canyon and La Sierra), within undeveloped areas along the project alignment, near Riverside Highland Water facility site thought to be in the vicinity of Barton Road (north of Palm Avenue), at the Gage Canal crossing in the cities of Riverside and Grand Terrace, at the Railroad crossings (AT&SF Railroad Alignment and Southern Pacific Railroad), the Riverside Canal, at Victoria Avenue and Irving Street. The extent and duration of the archaeological monitoring shall be determined by a Secretary of the Interior qualified archaeologist who is also qualified by Riverside County or the San Bernardino Archaeological Information Center (SBAIC) located at the San Bernardino County Museum, as appropriate to the location of the portion of the Project to be under construction, once the construction

schedule is defined for each reach of project construction. In the event of an accidental discovery, the archaeological monitor will comply with State *CEQA Guidelines* Section 15064.5.

MM Cult 2: (CULT-3) In response to comments from local tribes and to be sensitive to the cultural heritage of the tribes that have claimed an interest in the project area, the archaeological monitoring program shall be executed in conjunction with the tribes. As part of the preparation of the archaeological monitoring program, the interested tribes shall ~~to~~ assist in determining which areas of the project alignment where undisturbed soils will be excavated should be considered to be Sensitive Areas requiring monitoring. For the purposes of this mitigation measure, "undisturbed soils" shall mean: soil which has never been previously excavated or disturbed for construction or other purposes, and soil that was previously excavated but for which no archaeological or Native American monitoring was performed. "Sensitive Areas" include, at a minimum: the Santa Ana River (San Bernardino County) ~~and~~ Springbrook Wash (Riverside County and City) crossings, ~~and~~ a natural area near Irving and Firethorn Streets (Mockingbird Canyon area) in the City of Riverside, and the La Sierra area. Prior to grading, WMWD shall enter into a Treatment and Monitoring Agreement for one paid monitor for each reach of project construction with the culturally affiliated tribe, as determined by WMWD.

WMWD may seek the assistance of the Native American Heritage Commission (NAHC) in making the determination of cultural affiliation. ~~Prior to grading, WMWD shall contact the Native American Heritage Commission (NAHC) to determine the Most Likely Descendent (MLD) within any given Reach where the pipeline is to be constructed. WMWD shall enter into a pre-excavation agreement for one paid monitor with the Native American tribe identified by the NAHC as the MLD for each Reach of project construction where undisturbed native soils will be affected and sensitive resources are likely. In the event of an accidental discovery, the archaeological monitor will comply with State CEQA Guidelines section 15064.5.~~ To respond to the expressed desire of each tribe to monitor construction in sensitive areas and in the spirit of interagency cooperation, the Pechanga, Ramona, and San Manuel shall be notified by WMWD, prior to excavation activities.

MM Cult 3: (CULT-1) To ensure the proper disposition of cultural resources of interest to the tribes uncovered during excavation for the installation of the RCF Project, WMWD shall seek input from the tribes to develop a Discovery P~~p~~lan for such dispersal that encompasses the tribes' desired treatment and disposition of Native American cultural resources, including human remains. After considering the tribes' input and recommendations, WMWD shall approve and finalize such a plan prior to grading. In the alternative, WMWD may choose to negotiate treatment and disposition within the Treatment Agreements entered into with the ~~MLD~~ culturally affiliated appropriate tribe for each reach of construction. WMWD shall follow either the Discovery Plan or the Treatment Agreement for resources found on WMWD lands. Further, WMWD shall agree to present the plan and encourage land owners to follow the plan if cultural resources of interest to the tribes are found on land not owned by WMWD. In all cases, the actions of WMWD in its treatment of accidentally-discovered cultural resources shall be consistent with the requirements of CEQA Guidelines section 15064.5, the provisions of the Public Resources Code, and any other applicable state or federal law.

MM Cult 5: (CULT-2) If human remains are uncovered at any time, all activities in the area of the find shall be halted by WMWD or its contractor and the County Coroner shall be notified immediately pursuant to CA Health & Safety Code Section 7050.5 and CA PRC Section 5097.98. If the Coroner determines that the remains are of Native American origin, the Native American Heritage Commission (NAHC) shall be notified by the Coroner. The NAHC will determine and notify the Most Likely Descendent (MLD). The MLD shall be allowed to inspect the site of the

discovery. The MLD shall complete the inspection and make recommendations for treatment within ~~24~~48 hours of notification by the NAHC.

The State Department of Toxic Substances Control ("DTSC") letter dated March 3, 2011, states that DTSC can provide cleanup oversight for government agencies and private parties. **MM Haz 5** and **5a**, on page 4.8-26, will be modified to read:

MM Haz 5: All environmental investigation and/or remediation shall be conducted under a work plan approved by jurisdictional regulatory agencies overseeing hazardous waste cleanups. For the cities of Corona and Riverside, the local agencies are City of Corona Fire Department and City of Riverside Fire Department. For the cities of San Bernardino, Colton, and Grand Terrace, the enforcement agency is the County of San Bernardino Department of Environmental Health Services. In the unincorporated Riverside County, the Department of Environmental Health administers a program for the purpose of monitoring establishments where hazardous waste is generated, stored, handled, disposed, treated, or recycled, and to regulate by the issuance of permits, the activities of establishments where hazardous waste is generated. For any jurisdiction that may not be or have access to a responsible party for this purpose, the California Department of Toxic Substances Control shall be used to provide oversight. (Draft SEIR/EIS, p. 4.8-25)

MM Haz 5a: All environmental investigation and/or remediation shall be conducted under a Work Plan approved by jurisdictional regulatory agencies overseeing hazardous waste cleanups. For the city of Redlands, the local agency is City of Redlands Fire Department. For the city of Rialto and County of San Bernardino, the enforcement agency is the County of San Bernardino Fire Department, Hazardous Materials Division. For any jurisdiction that may not be or have access to a responsible party for this purpose, the California Department of Toxic Substances Control shall be used to provide oversight.

The Airport Land Use Commission, Riverside County ("ALUC") letter dated March 3, 2011, states that the Project will include facilities within various Airport Influence Areas. To assure that the Project will be in compliance with airport restrictions, **MM HAZ 11** will be added to page 4.8-27 and read as:

MM Haz 11: To avoid potential impacts resulting from temporary flight hazards within the Flabob Airport Influence Area, no construction equipment shall exceed 70 feet in height within the Northern Reach where it is located in Avalon Street south of the 60 Freeway, Mission Boulevard, and Limonite Street.

Also, **MM Haz 10** will be modified to read:

MM Haz 10: A minimum of 45 days prior to commencement of the Central Reach construction projects and a minimum of 45 days prior to commencement of the Clay Street Connection construction projects, the manager of the Riverside Municipal Airport shall be consulted in order to determine whether construction activities and construction equipment will encroach into the 100-to-1 imaginary surface surrounding the Riverside Municipal Airport. If it is determined that there will be an encroachment into the 100-to-1 imaginary surface, a minimum of 30 days before the date of the proposed construction, Western Municipal Water District shall file a FAA Form 7460-1, *Notice of Proposed Construction or Alteration*, for the construction activity. If FAA determines that the Project would potentially be an obstruction unless reduced to a specified height, WMWD will work with FAA to resolve any adverse effects on aeronautical operations. These could include things as, but not limited to:

- The use of construction equipment that is short enough to avoid encroachment into the imaginary surface;
- Alternative construction methods to avoid the use of cranes or other tall equipment; or
- Construction at night when the airport is closed.

The County of Orange Public Works letter dated February 28, 2011, requests a correction to a reference from the outdated 2003 Santa Ana Region de minimus permit to Order R8-2009-0003, on page 4.11-10. It will be corrected to read:

> Installation of the pipelines may result in the discharge of water resulting from dewatering activities associated with jack and bore construction techniques and with pipeline flushing. Should these flows occur, discharges will be performed in accordance with the California Regional Water Quality Control Board, Santa Ana Region Order R8-2009-0003, ~~No. 03-06~~ which established waste discharge requirements for discharges to surface waters that pose an insignificant (De minimus) threat to water quality, and the National Pollutant Discharge Elimination System (NPDES) Permit…

In addition, **MM Trans 3**, on page 4.12-38, which requires coordination with affected local jurisdictions prior to each individual phase of construction within the Project, will be modified to clarify that jurisdictions and/or agencies within jurisdictions which own underground facilities must also be consulted:

> **MM Trans 3:** Prior to the commencement of each individual construction project, WMWD and its contractor shall consult with the affected local jurisdiction(s) in order to coordinate project construction with applicable Capital Improvement Projects, underground facilities, and/or other known potential items needing to be taken into account during final design, plan specifications, and/or construction.

Likewise, the City of Riverside Community Development Department, Planning Division letter dated March 8, 2011, requests the provision of language in the Project specification to ensure the red light enforcement system at Van Buren at Arlington, is not impacted. To address this concern, **MM Tran 3**, on page 4.12-38, will be revised as follows:

> **MM Trans 3:** Prior to commencement of each individual construction project, WMWD and its contractor shall consult with the affected local jurisdiction(s) in order to coordinate project construction with applicable Capital Improvement Projects, underground facilities and/or other known potential items needing to be taken into account during final design, plan specifications, and/or construction so that issues can be avoided and/or remedies included in the specifications that meet with each jurisdiction's requirements.

The South Coast Air Quality Management District ("AQMD") letter dated March 8, 2011, suggests additional mitigation measures to further reduce air quality impacts from the Project. The following items shall be added to **MM Trans 2a**, on pages 4.12-37–38, to read as follows:

> **MM Trans 2a:** (TRAF-1 through TRAF-3, and TRAF-6): Based on the Traffic Impact Study Report and Traffic Impact Study Report Addendum prepared for the project, it is concluded that the traffic impacts generated from the installation of the pipeline will require implementation of mitigation which may include non-peak hour construction (AM peak hours are 7:00 a.m. to 9:00 a.m., PM peak hours are 4:00 p.m. to 6:00 p.m.), temporary lane closures, temporary lane shifts using channelizing devices, *temporary signal phasing modifications*, and detours to divert traffic through nearby streets. A Traffic Control and Safety Plan shall be prepared for each reach of

project construction. To maintain traffic flow and reduce air quality impacts, Traffic Control and Safety Plans shall implement recommendations . . . , and shall ensure that all vehicular/pedestrian/bike connections are maintained throughout the construction period and may include, but not be limited to, such things as:

- identification of all roadway locations where special construction techniques (e.g., directional drilling or night construction) would be used to minimize impacts to traffic flow;
- circulation and detour plans to minimize impacts to local street circulation. This may include the use of signing and flagging to guide vehicles through and/or around the construction zone;
- procedures to limit lane closures during peak hours to the extent possible;
- haul routes that would minimize truck traffic on local roadways to the extent possible;
- detours for bicycles and pedestrians in all areas potentially affected by project construction;
- procedures ensuring that open trenches subject to vehicular or pedestrian traffic would be covered at the end of each workday with metal plates capable of accommodating traffic;
- the installation of traffic control devices as specified in the California Manual on Uniform Traffic Control Devices;
- the installation of safety fencing, where needed, to protect pedestrians from construction areas;
- applicable railroad safety and engineering guidelines that would be adhered to when installing pipeline within a railroad right-of-way, and by which all construction crews and project personnel would be trained on applicable railroad safety guidelines prior to commencing work within the railroad right-of-way;
- procedures by which construction vehicles and equipment would not cross the tracks except at established public crossings or as specified by the applicable railroad company;
- developed access plans to be implemented for highly sensitive land uses such as police and fire stations, transit stations, hospitals, and schools. The access plans would be developed with the facility owner or administrator. To minimize disruption of emergency vehicle access, affected jurisdictions shall be asked to identify detours for emergency vehicles, which will then be posted by the contractor. The facility owner or operator shall be notified in advance of the timing, location, and duration of construction activities and the locations of detours and lane closures;
- procedures to store construction materials only in designated areas;
- coordination with local transit agencies for temporary relocation of routes or bus stops in work zones, as necessary; ~~and~~
- plans to restore all roads disturbed during project construction to their preconstruction condition, pursuant to franchise agreements with an applicable jurisdiction;~~.~~
- provide dedicated turn lanes for movement of construction trucks and equipment on and off site; and
- reroute construction trucks away from sensitive receptor areas.

In addition, **MM Trans 7**, on page 4.12-39, shall be modified as follows:

MM Trans 7: WMWD shall submit the location of proposed staging area(s) to appropriate local jurisdictions for review and approval. WMWD shall state the size of the area, the purpose (e.g., storage of construction equipment and employee parking), the number of vehicles and pieces of equipment to be stored, and the duration (in number of days and number of hours per day) that each staging area will be used. Such areas shall be configured to minimize traffic interference.

The AQMD letter also mentions the need for Project consistency with regionally enacted measures requiring all on-site construction equipment meet EPA Tier 2 or higher emissions standards. To further reduce construction equipment emissions, especially NOx and PM, **MM Air 7** will be added to the Final SEIR/EIS, on page 4.2-66, and will read as follows:

> **MM Air 7:** To reduce construction vehicle emissions, the bid specification packages for individual Project construction phases shall require the bidding company's fleet of off-road diesel-powered construction equipment greater than 25 hp to meet Tier 3 off-road emissions standards or better. Any emissions control device used by the contractor shall achieve Level 3 emissions reductions of no less than 85 percent for particulate matter, as specified by CARB regulations. The bidding company shall also provide certification that their fleet is in compliance with CARB's In-Use Off-Road Diesel Vehicle Regulation in effect at that time, or proof that the bidding company has applied to the SCAQMD SOON Program (and/or other applicable grant programs) to acquire funding assistance to bring it into compliance. During the bid process, proof of compliance shall be provided to WMWD, which shall include but is not limited to, CARB and/or SCAQMD operating permit(s), and other documentation such as a copy of each unit's certified tier specification, BACT documentation, and/or other compliance documentation.

The AQMD letter also provides a website with additional mitigation measure suggestions. To better match some of the recommended mitigation measures, **MM Air 4a**, on page 4.2-66, shall be updated to include:

- install gravel bed trackout apron (3 inches deep, 25 feet long, 12 feet wide per lane and edged by rock berm or row of stakes) to reduce mud/dirt trackout from unpaved truck exit routes where appropriate (i.e., Mockingbird reservoir and booster station, Clay Street booster station).

MM Water Qual 1 (HYD-1), on pages 4.11-11–12, will also be amended as follows to specifically identify wind erosion of stockpiled areas.

> **MM Water Qual 1** (HYD-1)**:** WMWD shall require contractors to implement a program of best management practices (BMPs) and best available technologies to reduce potential impacts to water quality that may result from construction activities. To reduce or eliminate construction-related water quality impacts before the onset of construction activities, the construction agent(s) shall obtain coverage under the National Pollutant Discharge Elimination System (NPDES) General construction permit. Construction activities shall comply with the conditions of this permit that include preparation of a storm water pollution prevention plan (SWPPP), implementation of BMPs, and monitoring to ensure impacts to water quality are minimized. As part of this process, multiple BMPs shall be implemented to provide effective erosion and sediment control. These BMPs shall be selected to achieve maximum sediment removal and represent the best available technology that is economically achievable. BMPs to be implemented as part of this mitigation measure shall include, but are not limited to, the following:
>
> a. Temporary erosion control measures such as silt fences, staked straw bales/wattles, silt/sediment basins and traps, check dams, geofabric, sandbag dikes, and temporary revegetation or other groundcover would be employed for disturbed areas to avoid water erosion. Stockpiled dirt could be covered, misted continuously, protected with three-sided temporary wind breaks or other means to avoid wind erosion.
>
> b. Storm drain inlets on the site and in downstream off site areas shall be protected from sediment with the use of BMPs acceptable to the construction agent(s), local

jurisdictions, and the California Regional Water Quality Control Board, Santa Ana Region.

c. Dirt and debris shall be swept from paved streets in the construction zone on a regular basis, particularly before predicted rainfall events.

d. No disturbed surfaces shall be left without wind and water erosion control measures in place between October 15 and April 15, and when winds exceed 25 MPH. The construction agent(s) shall file a Notice of Intent with the Regional Board and require the preparation of a SWPPP prior to commencement of construction. The construction agent(s) shall routinely inspect the construction site to verify that the BMPs specified in the SWPPP are properly installed and maintained. The construction agent shall immediately notify the contractor if there were a noncompliance issue and require immediate compliance.

The AQMD letter also recommends modifications to **MM Air 2**, on page 4.2-65. It will read as follows:

> **MM Air 2:** ~~During construction of the proposed improvements one of the following options must be used to supply the power needs for boring/tunneling operations:~~ Prior to construction of the proposed improvements, arrangements will be made with Southern California Edison to facilitate the use of electricity from power poles as a primary source or power for stationary construction equipment, unless construction is occurring at locations where power poles are not available. If access to power poles is not available, the following options must be used to supply the power needs for construction: 1) use natural gas-fueled generator sets; 2) use low-emission, duel-fueled generator sets; or 3) other low-emission power sources/supplies, as appropriate and feasible. ~~prior to construction of the proposed improvements, arrangements will be made with Southern California Edison to provide temporary construction power at the boring/tunneling sites (67 percent reduction)~~

The Department of Public Works, County of San Bernardino letter dated March 29, 2011, advises against altering direction, elevation, or capacity of any existing drainage facility, and that the proposed pipeline be placed below any drainage course scour depths.

MM Trans 3, on page 4.12-38–39, will be modified to include coordination for underground facilities, as follows:

> **MM Trans 3:** Prior to the commencement of each individual construction project, WMWD and its contractor shall consult with the affected local jurisdiction(s) in order to coordinate project construction with applicable Capital Improvement Projects, underground facilities and/or other known potential items needing to be taken into account during final design, plan specifications, and/or construction.

In addition, in response to **Comment 2** of the Department of Public Works, County of San Bernardino letter, the SEIR/EIS, Section 4.12 Traffic and Transportation, page 4.12-11 will be modified to include the following:

> However, LOS D is acceptable in unincorporated portions of the county of San Bernardino pursuant to its regulations.

In response to the Orange County Water District's comment and to clarify the project's objectives, Section 3.0, page 3.0-1 of the SEIR/EIS shall be modified as follows:

- . . . tie into the Chino Desalter Phase 3 expansion to facilitate the connection of WMWD facilities to those that are a part of the Chino Basin Dry-Year Yield Program;
- ~~leave available the opportunity for future use of recycled water for groundwater basin recharge;~~
- improve groundwater quality; . . .

Public Review Summary

The WMWD distributed a Notice of Preparation ("NOP") on July 31, 2008 to August 29, 2008, to federal, state, and local agencies; other public agencies; and interested private organizations and individuals, and held a public scoping meeting on August 11, 2008. Pursuant to Section 15082 of the State *CEQA Guidelines*, recipients of the NOP were requested to provide responses within 30 days after their receipt of the NOP. Copies of both the NOP and comments received on the NOP, are presented in Appendix A of the Supplemental EIR ("SEIR").

The federal Notice of Intent ("NOI") was published in the Federal Register on February 24, 2010. The NOI, the NOP, a summary of Scoping Information, and a location map were also posted on the BOR website.

The WMWD provided a Draft SEIR for the Riverside-Corona Feeder Project ("Project") for review from January 20, 2011 to March 7, 2011. Notices of Availability ("NOA") of the Draft SEIR were circulated to the State Clearinghouse, responsible agencies, and other interested parties on January 20, 2011. General public Notice of Availability of the Draft SEIR was also given by publication in The Press-Enterprise and the San Bernardino County Sun on January 20, 2011. As required by Public Resources Code Section 21092.3, a copy of the public notice was posted with the Riverside County Clerk on January 19, 2011.

The BOR published its NOA for the Draft EIS in the Federal Register on January 20, 2011 and circulated to responsible and trustee agencies. Comments were received for 60 days following posting.

During the public review periods for the Project, Lead Agencies received 22 comment letters from public agencies, water agencies, and one sovereign nation. Subsequent to the close of the public review periods, 3 comment letters were received from: Metropolitan Water District, U.S. Environmental Protection Agency ("EPA") and the County of San Bernardino Department of Public Works. EPA had been granted an extension by BOR to submit its comment letter by April 5, 2011, which it did.

All comments and Responses to Comments are included in Section 2.0 of this Final SEIR/EIS. In accordance with the provisions of Public Resources Code Section 21092.5, WMWD has provided a written response to each commenting public agency no less than 10 days prior to the proposed SEIR certification date.

List of Persons, Organizations, and Public Agencies that Commented on the Draft SEIR/EIS

Federal Agencies
- U.S. EPA, 4/5/11
- National Park Service, Partnerships Program, PWR, 3/17/11 (no comment)

State Agencies
- Caltrans, 1/26/11
- Department of Water Resources, 2/28/11
- Department of Fish & Game, 3/3/11/
- Department of Toxic Substance Control, 3/3/11
- State Clearinghouse, Governor's Office of Planning and Research, 3/8/11

Regional and Local Agencies
- Riverside County Fire Department, 1/26/11
- Riverside County Flood Control and Water Conservation District, 1/26/11
- City of Fontana, 2/15/11 (no comment)
- City of San Bernardino, 2/16/11
- Orange County Public Works Department, 2/28/11
- City of San Bernardino Municipal Water Department, 3/1/11
- City of Redlands, 3/7/11
- Orange County Water District, 3/8/11
- City of Riverside, 3/8/11
- Riverside County Airport Land Use Commission, 3/8/11
- Riverside County Transportation and Land Management Department, 3/8/11
- Southern California Air Quality Management District, 3/8/11
- Metropolitan Water District of southern California, 3/22/11
- County of San Bernardino, Department of Public Works, 3/29/11

Other Interested Parties
- Pechanga, Temecula Band of Luiseno Indians, 3/8/11

Section 2 Response to Comments

Pursuant to State *CEQA Guidelines* Section 15088, the responses to comments presented in this section address specific, relevant comments on environmental issues raised in the submitted comment letters. Complete copies of the original letters, including all attachments, are presented at the end of this section.

RESPONSE TO COMMENTS

FEDERAL AGENCIES

Response to the
United States Environmental Protection Agency
Region IX
Letter Dated April 5, 2011

Overview of Comments:

The U.S. Environmental Protection Agency ("EPA") has reviewed the above-referenced document. Our review and comments are provided pursuant to the National Environmental Policy Act ("NEPA"), the Council on Environmental Quality (CEOJ Regulations (40 CFR Parts 1500–1508), and our NEPA review authority under Section 309 of the Clean Air Act ("CAA")). Our comments are provided in accordance with your approval on March 16th of an informal EPA-specific extension to the comment deadline date from March 22, 2011 to April 5, 2011. We greatly appreciate the additional time to conduct our review.

The Bureau of Reclamation ("BOR") proposes to provide funds for the Riverside-Corona Feeder Project ("RCF"), an aquifer storage and recovery project (conjunctive use), planned by Western Municipal Water District ("Western"). The project includes new groundwater extraction wells and a 28-mile water distribution pipeline with pump stations and a reservoir storage tank. The project is intended to improve Western's water supply reliability through managed storage, extraction, and distribution of local and imported water, using available groundwater capacity in the San Bernardino and Chino Groundwater Basins.

We have rated the Preferred Alternative – Realignment Alternative with Additional Connections and the Draft EIS ("DEIS") as Environmental Concerns – Insufficient Information (EC-2) (see the enclosed "Summary of Rating Definitions"). There are five large contaminated groundwater plumes in the San Bernardino Groundwater Basin and eleven plumes in the Chino Groundwater Basin. While EPA supports coordinated management of surface and groundwater resources, we are concerned with the potential direct and cumulative effects on groundwater quality, and the proponent's ability to ensure that replenishment and extraction of water does not result in adverse effects on drinking water supplies, the environment, other third party beneficial uses, or the remediation and management of contaminated groundwater plumes.

While this draft EIS proposes both a feeder line and approximately twenty new production wells, the information provided on well locations is very limited. EPA understands that the well drilling will be addressed in the permitting process, however, in light of the numerous contaminated groundwater plumes in the immediate vicinity of these wells, EPA has the following concerns: i) that the new production well might spread one or more of the contaminated plumes into a clean aquifer zone, thereby affecting existing clean production wells; and ii) that any potential contamination of previously clean wells will not be addressed until the level of contamination exceeds Drinking Water levels. The Final EIS (FEIS) should include additional information on the risk of contamination to existing groundwater or recharged imported water, and provide a clear process to address the above concerns.

EPA encourages local and regional efforts to enhance water supply reliability, provided proposed actions are consistent with a balanced water supply and demand strategy, based upon a reliable developed water supply, and do not have adverse effects on the environment or third party beneficial uses. Conjunctive use of surface and groundwater, whereby excess surface water is stored in the groundwater aquifer for later recovery when surface water resources are scarce, can be an effective means to ensure a more reliable supply. Accurate monitoring, accounting, and active management of the aquifer are key in preventing

adverse effects. We recommend that BOR include in the FEIS, a detailed description of the proposed operations, monitoring, accounting, and management procedures of the proposed RCF.

EPA advocates sustainable water supply management, which balances existing water supply with demand. Sustainable water use makes efficient use of currently developed water through conservation, reuse, and recycling; manages groundwater to avoid long-term overdraft and reduction in quality; encourages users to diversify water management strategies; and promotes compatible multiple benefits of water use (for example, productive agriculture and wildlife habitat). Voluntary water exchanges and transfers that have no significant socioeconomic or environmental impacts also have a role in ensuring a sustainable water supply. We recommend the FEIS describe current and planned demand-side management strategies to promote sustainable water use and a reliable water supply for this region.

EPA appreciates the opportunity to provide comments on this conjunctive use project. We are available to discuss our recommendations. When the Final EIS (FEIS) is released for public review, please send one hard copy and one CD to the address above (Mail Code: CED-2). If you have any questions, please contact me at (415) 972-3521 or contact Laura Fujii, the lead reviewer for this Project. Laura can be reached at (415) 972-3852 or fujii.laura@epa.gov.

Response to Overview:

Western Municipal Water District ("WMWD") and the U.S. Bureau of Reclamation ("BOR") appreciate the EPA's interest in this Project. The responses to the EPA's detailed comments are provided below. WMWD and BOR look forward to working with the EPA to encourage local and regional efforts to enhance water supply reliability through sustainable water supply management.

It is hoped that the additional information and clarifications provided below will be adequate to allow the EPA to rate the Preferred Alternative – Realignment Alternative with Additional Connections -- and the Draft EIS (DEIS) as: Environmental Concerns – Adequate (EC-1). Should further information be needed, do not hesitate to contact:

Amy Witherall, Water Resources Planner, BOR, (951) 695-5310 or
Jack Safely, Water Resources Manager, WMWD, (951) 571-7241

Comment 1:

U.S. EPA DETAILED COMMENTS ON THE DRAFT ENVIRONMENTAL IMPACT STATEMENT FOR RIVERSIDE-CORONA FEEDER PROJECT, BUNKER HILL GROUNDWATER BASIN, SAN BERNARDINO AND RIVERSIDE COUNTIES, CA, APRIL 5, 2011

Include additional information on the risk of contamination to existing groundwater or recharged imported water. The Chino Basin extraction wells were added to the RCF to alleviate San Bernardino Basin water agency concerns with potential effects of the RCF on management and protection of San Bernardino Basin groundwater. Of major concern is the potential for the RCF to change contaminant plume movement, shape, and direction through its recharging and pumping, causing the plumes to migrate beyond their control wells and further contaminate groundwater (p. 4.7-19). EPA has similar concerns, especially given the presence of five large contaminated plumes inside and outside of the San Bernardino Basin (Newmark and Muscoy, Norton Air Force Base, Redlands-Crafton, Burlington Northern and Santa Fe (BNSF) and Rialto Colton), and eleven plumes in the Chino Basin (Chino Airport, California Institute for Men (Clvi), General Electric Flatiron Facility, General Electric Company's Engine Maintenance Center Test Cell Facility, Kaiser Steel Fontana Steel Site, Mid-Valley Sanitary Landfill, Milliken Sanitary Landfill, Municipal Wastewater Disposal Ponds, Upland Sanitary Landfill, Un-named VOC Plume South of the Ontario Airport, Stringfellow NPL Site).

> ***Recommendations:*** The Final EIS (FEIS) should include additional information on the risk of contamination to existing groundwater or recharged imported water as a result of RCF operations. A process should be described that clearly outlines how each well will proceed through the permitting process, including an impact analysis that shows that the location and operation of the well would not impact any existing contaminated plumes. The impact analyses should address the following concerns:
>
> i) That the new production well would not spread any of the contaminated plumes into a clean aquifer zone. (Toward this end, a system of monitoring wells would need to be identified for each proposed well location. These monitoring wells would provide both water level data for the capture analysis and chemistry data to detect any potential contaminated plume expansion.)
> ii) That any detection of contaminants in previously clean wells should be addressed as soon as possible, rather than waiting until such time as the contaminant levels exceed the Drinking Water Permit standards.
>
> In addition, the following issues should be addressed: state whether imported water, recharged into portions of the aquifer formerly occupied by contaminated plumes, could be contaminated by residual volatile organic compounds (VOC), perchlorate, trichloroethylene (TCE), or other contaminates. Describe the probable end uses, applicable drinking water standards, and proposed treatment of extracted water. We recommend the PETS include a description of the horizontal and vertical location of the contaminated plumes in the aquifers, and their relative spatial relationship to the "cones of depression" of probable extraction wells. If applicable, describe past or present effects of recharge and extraction of SWP water in the San Bernardino Basin and Chino Basin. If the information was provided in the 2005 PER, we recommend providing a summary of this information and any conclusions in the current FEIS.

Response to Comment 1:

A number of topics are touched upon in this comment and include: A) the inclusion of a new potential well field in addition to those analyzed in the 2005 PEIR, B) identification of pollution plumes affected by the Project, C) management and protection of the groundwater quality of the Basin, especially as it relates to potential impacts to existing wells and/or pollution plumes, D) well permitting procedures, E) description of end uses of Project water, F) how water will be treated, G) vertical and horizontal characterization of the pollution plumes potentially affected by the Project, and H) the past and present effects of recharge and extraction of SWP water in the basins.

To clarify, this environmental document evaluates storage of imported water in the San Bernardino Basin with commensurate extraction of up to the amount of previously stored imported water. No recharge of the Chino Basin is a part of this Project; only extraction of water already available to WMWD through a previously approved project. Although the comment implies that the Project will impact the Chino Basin similarly to the San Bernardino Basin, this is not the case and the Draft SEIR/EIS correctly incorporated prior Chino Basin environmental documents and analyses. The RCF Project does not propose to recharge water into the Chino Basin; and proposes to extract no more than 5,000 acre-ft per year (AF/YR) from the Chino Basin desalter project, which represents 3.6 percent of the safe yield of the Chino Basin, which is 140,000 AC FT/YR. (SEIR/EIS, p. 4.6-26) The extraction of up to 5,000 AF/YR was determined to be the appropriate maximum for WMWD in "the [Optimum Basin Management Program,] Chino Groundwater Basin (Chino Basin) Dry-Year Yield Program Expansion (DYYP Expansion) [which] is a proposed conjunctive-use program developed by the Chino Basin Watermaster in association with the Inland Empire Utilities Agency (IEUA), MWD, Three Valleys Municipal Water District (TVMWD), and WMWD." (SEIR/EIR, p. 4.7-31) The RCF Project facilitates WMWD's primary role in the DYYP Expansion by providing a direct export connection to the Chino Basin; WMWD's primary role is on the extraction, or "take" side, of the DYYP Expansion. (SEIR/EIR, pp. 4.7-31 through 4.7-32) The DYYP Expansion was included as part of the Project previously evaluated in the IEUA's *Final Subsequent EIR for the IEUP Peace II Project*, 9/25/2010, which concluded, "all hydrology and water quality impacts can be offset or otherwise mitigated, and the hydrology and water quality impacts (including those identified under Utilities and Services Systems [section of the *Peace II SEIR*]) have been found to be less than significant, on a project-specific and cumulative basis." (SEIR/EIR, pp. 4.7-31 through 4.7-32) Therefore, the *RCF Draft SEIR/EIS* included the potential Project impacts to the Chino Basin through reference and summary of the *Peace II Final SEIR*, and further evaluation is not needed related to the Chino Basin. All responses below will refer to the San Bernardino Groundwater Basin (the Basin).

A) The EPA is correct that the San Bernardino Basin extraction wells were added to the RCF Project evaluated in the *2005 Programmatic Final EIR* (2005 PEIR) to alleviate the San Bernardino Basin water agency's specific concerns with the potential effects of the RCF on management and protection of the San Bernardino Groundwater Basin (Basin) with the potential extraction wells for the RCF limited to the Priority Group areas analyzed in the 2005 PEIR (Draft SEIR/EIS, Figure 3.0-2, p.3.0-11). The City of San Bernardino was concerned with the potential effect of the RCF Project on their EPA-mandated cleanup efforts of the Newmark and Muscoy plume while City of Riverside was concerned about contamination of its wells, which are located in the Basin. In addition, with the drought conditions of the late 2000s and legal constraints on imported water from the Sacramento Delta area, modeling the Project operations with much lower levels of available surplus water from the SWP, also needed to be evaluated. The *Draft Supplemental EIR/EIS* (SEIR/EIS) addressed these concerns and evaluated the Project's effect on groundwater in the San Bernardino Basin, as discussed in the following paragraphs.

B) The Draft SEIR/EIS analyzed water quality impacts to the San Bernardino Basin in Section 4.7, as recognized in the EPA comments. The contamination plumes within the San Bernardino Basin are described in the *Draft Supplemental EIR/EIS* (SEIR/EIS) and include: Newmark and Muscoy, Norton Air Force Base, Redlands-Crafton, and Burlington Northern and Santa Fe (BNSF). (SEIR/EIS, p. 4.7-4 and Figures 4.7-1 and 4.7-2) However, the Rialto-Colton plume is not located in the San Bernardino Basin, as shown on Figure 4.7-1 of the SEIR/EIS. As of 2005 when the original EIR for this Project was certified, "All of the existing pollution plumes that are mentioned above are currently undergoing remediation in accordance with state and federal laws." (Final PEIR 2005, p. II-6-4) This statement still holds true.

C) In this comment, concern is expressed that operation of the Project would cause existing groundwater contaminants such as residual volatile organic compounds (VOC), perchlorate, trichloroethylene (TCE), and other contaminates associated with the existing pollution plumes to contaminate imported water or eventually cause previously "clean" wells to become contaminated. "By the nature of the project, no additional sources of contaminants such as TCE, PCE, DBCP, and nitrates (NO_3) will be added by the RCF project." (Draft SEIR/EIS, p. 4.7-11) However, such contaminants can be "pulled" or "pushed" by water extracted or recharged within the Basin. Thus, groundwater modeling was conducted for the Final PEIR 2005 and for the Draft SEIR/EIS 2011.

The *2005 Project Alignment PEIR* evaluated potential Project groundwater contamination impacts related to TCE, PCE, Perchlorate, nitrates (NO_3), and a pesticide, dibromochloropropane (DBCP), all known contaminants within the plumes. At the time of the 2005 modeling analysis, the primary location where wells were anticipated (new or existing), was in the general areas shown on Figure 3.0-2 of the Project Description. (Draft SEIR/EIS, p. 3.0-11) A summary of the results of the 2005 PEIR analysis is presented in the Draft SEIR/EIS beginning on page 4.7-10. Specifically, "WMWD joined with the City of San Bernardino and other producers that could affect the effectiveness of inhibitor wells in preventing the spreading of volatile organics contamination to develop an Institutional Controls Groundwater Management Program (ICGMP). To respond to the City's concerns about the RCF Project substantially and adversely affecting the movement of the contamination plumes in the Bunker Hill Basin, the MODPATH and MT3DMS models were run based on the same assumptions used for operations in the MODFLOW analysis." (Draft SEIR/EIS, p. 4.7-11) In response to concerns raised by Basin water agencies (as described above), a potential well field was located further east and TCE, PCE, and Perchlorate associated with this additional well field, were evaluated in detail by GEOSCIENCE in, *Groundwater Modeling of Riverside-Corona Feeder Project Conjunctive Use Scenarios*, October 2009. (Draft SEIR/EIS, Appendix F) This analysis was summarized in Section 4.7 beginning on page 4.7-15 of the Draft SEIR/EIS. Therefore, results from the groundwater modeling performed for the Project is included in the Draft SEIR/EIS and addresses the Project's potential to impact individual wells, ICGMP inhibitor wells, and/or affect the extent of existing contamination plumes.

In response to the results of the groundwater modeling completed for the *Certified Final PEIR, 2005*, mitigation measures were included that required ongoing operating plan testing, monitoring and modification to avoid impacts and/or implement various types of mitigation strategies depending on the location, contaminant levels, etc., that might be encountered at any given well site. The *Certified Final PEIR 2005* was very clear that, additional California Environmental Quality Act (CEQA) compliance would be needed for well placement. As a result of GEOSCIENCE's 2009 modeling and in response to the EPA's and other's comments, herein,

mitigation measures related to groundwater quality will be modified in the Final SEIR/EIS. (See **Response to Comment 2**, below.)

D) As a large public water wholesaler and retailer, WMWD understands that one of the more significant threats to health and safety is the purity and quality of the water consumed by the public, and is subject to the many federal and state laws and regulations that have been developed and adopted over the years to assure that public drinking water is safe for human consumption. The adoption of implementing regulations and the enforcement of the drinking water laws of California are the responsibility of the California Department of Public Health (Department) pursuant to the Safe Drinking Water Act (chapter 7 of the California Health and Safety Code). A key feature of the Safe Drinking Water Act is the requirement that no person or organization may operate a public water system without having secured a domestic water supply permit from the Department, which of course, WMWD secured long ago. An amendment to the water supply permit is required for any changes in the water system such as:

- Change in ownership of the water system
- The addition of new water sources
- Any changes in the method of treatment
- The addition of any storage reservoirs
- A major expansion of the service area
- Any change in the distribution system that does not comply with the waterworks standards

Pursuant and subject to the requirements of the California Health and Safety Code, Division 104, Part 12, Chapter 4 (California Safe Drinking Water Act), Article 7, Section 116550, relating to changes requiring an amended permit, WMWD will be mandated to amend its water supply permit prior to the following actions:

1. Addition of a new distribution reservoir (100,000 gallon capacity or greater) to the distribution system;
2. Modification or extension of an existing distribution system using an alternative to the requirements in this chapter;
3. Modification of the water supply by:
   a. Adding a new source;
   b. Changing the status of an existing source (e.g., active to standby); or
   c. Changing or altering a source, such that the quantity or quality of supply could be affected;
4. Any addition or change in treatment, including:
   a. Design capacity or
   b. Process (California Code of Regulations Title: 22, Chapter 15, Article 2, Section 64556)

Thus, due to the long-term, phased nature of construction of the Project, each reach or operable component of the Riverside-Corona Feeder Project coming on line for service, will require an amendment to WMWD's water supply permit.

In addition and specifically associated with drinking water wells, each well will be required under its permit, to test, report, and treat in certain ways and timeframes depending on the contaminants at that specific well; basin-side cooperative monitoring also occurs. A water purveyor might use a hypothetical example schedule for the water quality monitoring of its wells, as presented below. Results of this type of monitoring are required to be reported to the County of San Bernardino

Department of Public Health. However, because no specific well siting/drilling is a part of this environmental evaluation, no Project-specific well water quality monitoring schedule can be presented at this time.

Monitoring Type	Monitoring Location	Monitoring Frequency
Background monitoring for basin-wide authority	All wells	Annually (August)
Bacteriological Monitoring	Wells A and B	Monthly
	New wells placed into service	Monthly until 6 consecutive results showing absence of coliform are obtained
	Established wells	Quarterly
EDB/DBCP	Wells A, C7, D, & F1	Every 3 years (2011, 2014, 2017)
DBCP	Wells H & M	Quarterly
General Mineral/General Physical	All wells	Quarterly
Inorganics	All wells	Annually (October)
Nitrate	Wells E, E1, G, H1, and N	Quarterly
Nitrate	Wells H & M	Monthly
Perchlorate	All wells	Quarterly
Radiological	All wells	Every 3 years (2011, 2014, 2017)
SOCs	Wells P, R& R1	Every 3 years (2011, 2014, 2017)
VOCs	All wells	Every 3 years (2011, 2014, 2017)

E) The end users of WMWD's water are both retail and wholesale customers of treated drinking water as described in detail in Section 2.1, Background, of the Draft SEIR/EIS. "Today, the District serves roughly 24,000 retail and eight (8) wholesale customers with water from the Colorado River, State Water Project, and groundwater. As a member agency of the Metropolitan Water District of Southern California (MWD), WMWD provides supplemental water to the cities of Corona, Norco, a portion of Murrieta, and Riverside and the water agencies of Box Springs Mutual, Eagle Valley Mutual, Elsinore Valley, Lee Lake, and Rancho California. WMWD serves customers in the unincorporated areas of El Sobrante, Eagle Valley, Temescal Creek, Woodcrest, Lake Mathews, and March Air Reserve Base.[1] An interconnected water distribution network and a reliable water supply are critical to serve the needs and meet the demands of these water customers." (Draft SEIR/EIS, p. 2.0-1) The Project water extracted from the Basin Area will be treated and used for potable purposes which include human consumption and private landscape irrigation. See **Responses to Comments 2, 3,** and **4** for clarifications regarding the use of the water stored and extracted by this Project and water quality.

F) The Riverside-Corona Feeder Project is designed to transport potable water. Water produced from any new project well or from an existing well that is transported and/or stored in the Project facilities must meet drinking water standards. Based on this comment by the EPA and some confusion on the part of other commenters, the Annotated Draft SEIR/EIS, which is bound with the Responses to Comments to form the Final SEIR/EIS, will be edited as follows:

Various paragraphs on pages 1.0-1 and 1.0-2:

> The project is proposed to store excess imported water, when it is available, to increase firm water supplies, to improve water quality, and to reduce water costs. The project proposes to manage the groundwater levels through the construction of groundwater wells in the San Bernardino Basin Area and pumps to deliver the treated groundwater supply to water users. The project will also include a new potable water pipeline system to connect to existing water facilities in ~~serve~~ portions of San Bernardino and Riverside counties. This system of storage, extraction, treatment, and distribution will improve the reliability of WMWD's water supply through the managed storage and distribution of excess imported water and reduce possible water shortages during dry years through reduced dependence on imported water during dry year conditions. To achieve this purpose, the RCF project replenishes excess State Water Project (SWP) water supplied by Metropolitan Water District of Southern California (MWD) into the San Bernardino Groundwater Basin, and extracts, treats, and moves water throughout the region by way of interconnections between local groundwater basins . . .
>
> The realignment evaluated by this SEIR also allows WMWD to address the reduced potential for California State Water Project water availability for groundwater replenishment purposes and includes connections to the Jurupa Community Services District's pipeline facilities, the San Bernardino Valley Municipal Water District's Inland and Central Feeders, and other existing WMWD facilities. These connections will facilitate the transportation of potable water from one water agency to another and one groundwater basin to another through the development of multiple interconnected pipelines within the project area. The facilities may also be used to convey local water supplies, once treated, pursuant to rights held by . . .

Various paragraphs on pages 2.0-3, 2.0-4, and 2.0-5:

> The purpose of the RCF is to store excess imported water, when it is available, to increase firm water supplies, to improve water quality, and to reduce water costs. The project proposes to manage the groundwater levels through the construction of groundwater wells and pumps to deliver the treated groundwater supply to water users. The project will also include a new potable water pipeline system to connect to existing water facilities in ~~serve~~ portions of San Bernardino and Riverside counties . . .
>
> RCF infrastructure will allow WMWD to purchase State Water Project water from the Metropolitan Water District of Southern California (MWD) and store that water in the San Bernardino Groundwater Basin Area, and to extract, treat and distribute the water from the Basin Area when it is needed. . . .

The facilities may also be used to convey local potable water supplies pursuant to rights held by the City of Riverside and the Elsinore Valley Municipal Water District and to deliver treated imported water to wholesale customers. If appropriate agreements can be reached, additional native water may at times also be available. The facilities may also be used to obtain and convey native water, once treated, pursuant to rights held by other agencies, such as the City of Riverside, Jurupa Community Services District, Rubidoux Community Services District, the Chino Basin Desalter Authority, San Bernardino Valley Municipal Water District, and Elsinore Valley Municipal Water District. This project will make WMWD less dependent on the direct delivery of water from the Metropolitan Water District of Southern California (MWD).

Page 3.0-23

The Central Feeder Connection consists of approximately 6,350 linear feet of an up to 54-inch diameter pipeline located in the San Bernardino Avenue right-of-way between Alabama Street in unincorporated San Bernardino County and Webster Street in the city of Redlands. (Figure 3.0-8, Central Feeder Connection) Adjacent to the Central Feeder Pipeline are up to five new proposed 350-HP x 2,200-gallons-per-minute (GPM) groundwater production wells, including treatment facilities to meet drinking water standards, within the well field identified on Figure 1.0-1 (exact locations not determined) which will be connected into the San Bernardino Valley Municipal Water District's Central Feeder Pipeline; thereby providing additional means for transporting San Bernardino Groundwater Basin water through regional pipeline facilities that are connected to the Riverside-Corona Feeder project. These five wells are included within the 20 total wells associated with the RCF.

G) The comment suggests that a vertical and horizontal characterization of the pollution plumes and their relative special relationship to the cones of depression of the proposed RCF Project extraction wells be included in the Final SEIR/EIS. To provide this information, GEOSCIENCE was asked to evaluate available data and provide such characterizations, as requested.

There are five major groundwater contaminant plumes that are known to affect the SBBA, which include: (1 and 2) Newmark/Muscoy plumes; (3) Crafton-Redlands plume; (4) Norton Air Force Base (AFB) plume; and, (5) Santa Fe plume. These plumes have been extensively investigated and documented by Federal and private entities. The current level of monitoring and remediation varies for each plume. A description of the horizontal and vertical location of each contaminant plume is provided below. Additionally, a discussion of the relative spatial relationship of each plume to the cones of depression associated with the proposed RCF Project wells is provided.

Crafton-Redlands Plume

The current horizontal distribution of the Crafton-Redlands Plume is approximately 10 miles long (east to west) and 0.75 to 3.25 miles wide (north to south). The vertical extent of the plume in the area of the proposed Project well field located within San Bernardino County east of Alabama Street and north of Almond Avenue (Draft SEIR/EIS Figure 3.0-8), was determined from water quality samples collected from City of Redlands' Well 31-A. Well 31-A is perforated from 480 ft below ground surface (bgs) to 700 ft bgs, and is located approximately 3,000 feet east of this proposed well field. In August 2008, the perchlorate concentration in Well 31-A was reported to range from 32 to 33 µg/L; and depth to groundwater in Well 31-A is approximately 190 feet bgs. Since the aquifer is unconfined in this portion of the Basin, it is assumed that the vertical extent

of the plume is from approximately 190 feet bgs to as much as 700 feet bgs. The proposed Project well field located within San Bernardino County east of Alabama Street and north of Almond Avenue (Draft SEIR/EIS Figure 3.0-8) is located within the Redlands-Crafton Plume.

Norton AFB Plume

The Norton AFB plume is located downgradient from the former Norton Air Force Base in the central part of the SBBA. The horizontal distribution of the plume was reported to be approximately three miles long (northeast to southwest) and approximately a half mile wide (U.S. Air Force, 1993). In July 1992, the known vertical extent of the plume was from approximately 100 ft bgs to approximately 280 ft bgs, which is within HSU-2 (U.S. Air Force, 1993).

Newmark-Muscoy Plumes

The Newmark Plume and Muscoy Plume have been designated by the U.S. EPA as the Newmark Groundwater Contamination Superfund Site, which borders Shandon Hills in the northwestern and west-central portions of the SBBA. This site consists of three Operable Units[3] (OUs), including the Source OU, the Newmark OU, and the Muscoy OU. The Newmark OU covers approximately seven square miles on the north and east sides of Shandon Hills. The Muscoy OU covers approximately eight square miles west of Shandon Hills (USEPA, 2007). The groundwater contaminant plume is dispersed approximately five miles downgradient on the Newmark side and three miles downgradient on the Muscoy side (USEPA, 2007). The hydrostratigraphy of the Newmark OU consists of an unconfined alluvial aquifer that overlies igneous and metamorphic bedrock units in the northern portion of the OU, and a two-aquifer system in the eastern and southern portions of the OU. The unconfined aquifer consists of 350 to 400 ft of unconsolidated sands and gravels with discontinuous layers of silt and clay (URS, 1995). The hydrostratigraphic units of the two-aquifer system have been termed the Upper Water Bearing Member (UWBM), the Middle Confining Member (MCM), and the Lower Water Bearing Member (LWBM). The LWBM generally occurs between 450 and 500 ft bgs, but may also extend to as much as 1,200 ft bgs (SECOR, 2005). The hydrostratigraphy of the Muscoy OU is similar to that of the Newmark OU, existing as a single unconfined aquifer in the northern portion that gradually separates into a multiple aquifer system in a southerly direction (SECOR, 2005). Contaminated groundwater associated with both OUs was found to be present in the unconfined aquifers, the UWBM, and the LWBM (possibly to the bedrock surface) (USEPA, 2007).

Santa Fe Plume

Although potential impacts to the Santa Fe plume were not evaluated in the same manner as the Newmark-Muscoy and Norton AFB plumes, the California Regional Water Quality Control Board recently declared that the Santa Fe plume has been remediated to the point where it no longer possess a threat to human health (RWQCB, 2011). Therefore, since the operation of the RCF Project is not predicted to impact this plume, a description of its horizontal and vertical locations and relative spatial relationship to the proposed RCF wellfield is not needed.

As indicated in section 3.7 of the Draft SEIR/EIS, there are currently four operational alternatives for the RCF Project. The fourth alternative, referred to as the Realignment Alternative with Additional Connections (Preferred Alternative) is the proposed “project” and would include the use of 20 project extraction wells. Five of these 20 wells are proposed to be drilled and constructed in the Redlands area. The locations of the remaining 15 project wells have not been determined. The five new wells would have an estimated capacity of 3,000 acre-ft/yr each (total

[3] A term for an area where separate activities are undertaken as part of an overall Superfund site cleanup.

of 15,000 acre-ft/yr), based on local geohydrologic conditions. The proposed area for the new wells (i.e., "RCF Project extraction wellfield") is located immediately west of the 210 Freeway in between Lugonia Avenue and the Santa Ana River (refer to Figure 2 of Item 1, Appendix F of the Draft SEIR/EIS). The Redlands Plume Project Feasibility Study Remedial Action Plan (Strategic Engineering and Science et. al., 2010) indicates that this area of the SBBA is composed of undifferentiated sand and gravel that overlie crystalline basement rocks (i.e., non-water bearing). Groundwater in this area of the basin is unconfined, having no significant layers of silt and clay throughout the formation. This unconfined condition of the aquifer continues approximately one mile west of the proposed RCF wellfield. From this area westward, silt and clay layers confine and divide the aquifer system into "upper," "middle" and "lower" aquifers that have been designated by Tetra Tech as HSU-2, HSU-4, and HSU-6, respectively. Results of model predicted groundwater levels show the cone of depression created from the RCF wellfield would be minimal (see Figures 18-29 of Item 1, Appendix F in the Draft SEIR/EIS).

Results from the model runs reported in Appendix F of the Draft SEIR/EIS were used to determine the relative spatial relationship of the major contaminant plumes to the cones of depression associated with the proposed RCF Project extraction wells. However, since the relative locations are only known for the proposed five new wells, an evaluation of the spatial relationship of the contaminant plumes and the remaining 15 project wells was not performed.

The Crafton-Redlands Plume is the only known contaminant plume to exist within the proposed RCF Project wellfield. Model results show that the difference between average groundwater levels in City of Redlands Well 32 (located next to Well 31-A, approximately 3,000 ft east of the RCF wellfield) for the Baseline Run (No Project) and Scenarios 1, 2 and 3 (i.e., Baseline water level minus Scenario water level) would be -1 ft, -4 ft and -6 ft, respectively (see Table 1 of Item 1, Appendix F of the Draft SEIR/EIS). Therefore, change to the horizontal or vertical extent of the Crafton-Redlands Plume due to the operation of the RCF wellfield would be minimal compared to the change predicted to occur under Baseline Run (No Project) conditions. The remaining four contaminant plumes in the SBBA (i.e., Newmark, Muscoy, Norton AFB, and Santa Fe) do not occur within the predicted cones of depression of the proposed RCF Project wellfield. Results for the TCE transport model show no change to the Norton AFB, Newmark-Muscoy, or Santa Fe plumes for RCF Scenarios 1 through 3 as compared to the plume area under Baseline Run (No Project) conditions (see Appendix F of the Draft SEIR/EIS).

H) Replenishment of the Basin with SWP water has been occurring since 1972.[4] The past and present effect of that activity plays into the California Regional Water Quality Control Board, Santa Ana Region 8's (RWQCB's), water quality objectives (which are presented in Table 4.7-B of the Draft SEIR/EIS). Similar to the question EPA is asking in this comment, in 2006 RWQCB asked all the water agencies that recharge SWP water within the Santa Ana River aquifer system to provide information regarding SWP recharge and extraction in the basins. A cooperative agreement between the RWQCB and these seven agencies now requires all agencies up and down the Santa Ana River who replenish with SWP water to model and report systematically to RWQCB. Currently within the San Bernardino Basin, San Bernardino Valley Municipal Water District (SVMWD) is the agency that receives and spreads SWP water and thus, is a party to this agreement with respect to the Basin. WMWD is also a party to the agreement with respect to the Riverside Basin. The agreement spells out sampling methods and timing, responsible party(ies), and reporting requirements and timing. The reporting years required start with agencies at the

[4] Phone communication between Cathy Perring of Webb Associates and M. Samuel Fuller, Chief Engineer, San Bernardino Municipal Water District, 7/15/2011.

uppermost reaches of the SAR, such as San Gorgonio Pass Water Agency which is due to report to RWQCB in 2012. The results of its report are then used in the modeling/reporting performed by SBVMWD which is due to RWQCB in 2013, and so on, down the river basin. Thus, the effects of recharge and extraction of SWP water in the basins is being monitored and evaluated on an ongoing basis by the state.

The modeling done for the Riverside-Corona Feeder Project used historic recharge levels and locations, as well as other agreements and accords, that mandate replenishment in its baseline modeling which includes SWP water spread by SBVMWD under its replenishment obligations in the Western Judgment. Therefore, in addition to regional modeling, sampling and reporting required by RWQCB, with respect to this project, the monitoring of well water required by the state and the ongoing modeling of Project operations will also provide evaluation and monitoring of SWP water effects on the basins in the SAR watershed.

Comment 2:

Describe the effectiveness and feasibility of proposed remedies for project-contaminated wells and groundwater. The DEIS describes possible remedies to be implemented if monitoring and well testing reveal project contamination of existing or proposed well sites and groundwater. These remedies include appropriate use of the contaminated water, blending the poor quality water with better quality water, choosing another water production and/or spreading area, carefully managing where wells are operated to prevent or delay contamination, and installing barrier wells and/or wellhead treatment (p. 1.0-33). EPA recommends the FEIS provide additional details on how the mitigation measures will be selected, prioritized, and implemented. This will likely depend upon the contaminants that require mitigation, but some specifics can be provided.

Recommendations:
We recommend the FEIS include a description of the process whereby a specific baseline mitigation plan would be developed for each new production well. This mitigation plan would serve to identify the appropriate performance measures for identification of contaminated plume migration, allow immediate notice of violation, and lay out the specific response actions to be taken to remedy any problems identified. A baseline mitigation plan (as existed for the Newmark Groundwater Superfund Site) will allow immediate response action, while further analysis and negotiation take place to address the issue in the long term. This plan should describe the effectiveness and feasibility of these remedies in achieving the required water quality for the planned water use. For instance, describe wellhead treatment technologies and other remedies that would be used to achieve acceptable levels of VOC, perchlorate, TCE, and other contaminants of concern in extracted water.

Response to Comment 2:

The comment is referring to mitigation measure **MM GWQ 2 (Revised)**, which appears in the table referenced from page 1.0-33 and which is explained in greater detail in Section 4.7, Groundwater Quality. This mitigation measure from the *Certified 2005 PEIR* was revised to address similar concerns raised in the comments received during the Notice of Preparation/Notice of Intent period for preparation of this SEIR/EIS and to reflect WMWD's involvement in Basin management with the Basin Area Technical Advisory Committee (BTAC). (Draft SEIR/EIS, p. 4.7-32) As described in **Response to Comment 1**,

above, prior to the drilling and construction of each new well, WMWD will be required to amend its Water Supply Permit. This is a rigorous process that takes into account the contamination levels at the time of initiation of production and appropriate and effective treatment must be provided prior to permit issuance. Thus, in addition to the "RCF operations management plan" required in **MM GWQ 2**, the permit amendment application process will serve as the "baseline mitigation plan" and receive approval from the State Department of Public Health.

The various possible remedies outlined in **MM GWQ 2,** are all feasible but have various levels of effectiveness and appropriateness depending on the contaminants at issue in a given well and whether the well is new or existing. With respect to existing wells, the first priority for the Project is to avoid having a significant impact on any existing wells through operating in such a manner that will prevent new contamination or worsening of existing contamination. **MM GWQ 2** will be modified in the Final SEIR/EIS (see the end of **Response to Comment 2**, below) to identify when action and implementation of preventative measures are warranted. The first trigger to make operating modifications will be during the required annual modeling of the Basin, which must include RCF operations. Planned operations can be changed prior to implementation if model results indicate that the Project's projected annual recharge and/or extraction plan causes an existing well to drop more than 10 feet (see **MM GWL 2**), if a previously "clean" well is projected to become contaminated, or if a contaminated well is projected to see a significant increase in contaminant levels as a result of the RCF Project. Monitoring wells around each new well constructed for the Project (as suggested in **Comment 1**) would not be necessary since this information is measured and reported regularly for all potable water wells.

Based on this comment, **MM GWQ 2** will be revised in the Final SEIR/EIS as follows:

> **MM GWQ 2 (Revised):** To assure that ongoing management of the RCF is coordinated with management of the Basin Area as a whole, monitoring and adaptive management shall be employed.
>
> a) The RCF operations management plan will be developed and tested using the groundwater modeling employed by the Basin Area TAC (or its successor or assignee) on an annual basis. Existing groundwater flow and groundwater quality model(s) shall be used to predict the effects of project operations on groundwater quality. The results of the modeling shall be presented to the BTAC. If the results indicate that the location of pollution plumes will be shifted by project operations such that additional existing 'clean' wells could become contaminated, WMWD shall modify planned operations to avoid the result or otherwise address the modeled situation to the satisfaction of the BTAC. Examples of operational modifications that could be used, are provided in the following table.
>
> b) When a new well is drilled, indicator wells in the vicinity that could be affected by Project operation will be selected to become part of the annual operations management plan. If water quality testing at any indicator wells (which are already tested regularly) suggests that the replenishment and pumping regime of the proposed project operation is causing drinking water quality in a given well to become newly contaminated or to worsen due to the RCF Project~~, exceed state drinking water standards~~, production and/or spreading in the area(s) contributing to the contamination shall cease until a remedy is identified and implemented. ~~adverse affects associated with the project no longer occur.~~ Such remedies may include but not be limited to the following:

Contamination Remedy Examples and Method Priorities

New Wells Drilled for Project Operations		
Treatment Option	First Priority Methods	Secondary Priority Methods
Avoidance	• Move or Avoid Production in a Contaminated Location	• Wellhead treatment
Wellhead Treatment[1]	• Chlorination or ozonation for disinfecting (required for all wells) • Ion Exchange for nitrates and other contaminants • Activated Carbon	• Reverse osmosis
Blending	• If multiple wells in proximity have varying levels of constituents, blending could occur to dilute contaminants to legal levels prior to distribution	
Existing Wells at Risk of Contamination by Project Operations		
Treatment Option	First Priority Method	Secondary Priority Method
Careful Management	• Participate in ongoing conjunctive use management of the Basin so Project is a benefit to Basin health for a safe drinking water supply and for the ecological health of the watershed	• choose alternative production and/or spreading location(s) • produce or spread at a different time of year • install barrier wells
Blending	• If multiple wells in proximity have varying levels of constituents, blending could occur to dilute contaminants to legal levels prior to distribution	
Alternative use of contaminated water	• Could be effective in areas where non-potable system or other non-potable use exists if affected well operator is provided with drinking water quality replacement water from another source	

[1] Other than disinfecting, all other treatment approaches are dependent on the contaminants that need to be removed.

~~*Appropriate Use*. Contaminated water could be utilized for purposes that would allow or require lower water quality standards.~~

- ~~*Blend*. Water that has poor quality can be blended and diluted until water quality standards are achieved.~~
- ~~*Move (Avoid)*. Choose another production and/or spreading area.~~
- ~~*Careful Management*. Operate wells in a manner that will prevent or delay contamination. This may include installation of barrier wells or avoidance of strategies that would result in acceleration of the movement of contaminated water towards existing wells.~~
- ~~*Wellhead Treatment*. Wellhead treatment can be utilized to bring water to acceptable water quality levels.~~

Comment 3:

Address how the project will be made to comply with future changes to water quality and drinking water standards, including those applying to chromium and hexavalent chromium.
In the reasonably foreseeable future, the water quality standards for chromium will likely be changed and it is possible that a drinking water standard for hexavalent chromium will be promulgated. The California Office of Environmental Health Hazard Assessment (OEHHA) has recently released a revised draft public health goal (PHG) of 0.02 parts per billion (ppb) for hexavalent chromium, which is also known as chromium 6. The current MCL for chromium is 50 ppb. Establishing a PHG is the first step in the development of a new or revised maximum contaminant level (MCL). Since the PHG is so much lower than the current MCL, a new MCL could have a large effect on the project in the future.

Recommendation:
Development of a new MCL is a lengthy process and takes years to achieve. The FEIS should account for how the proposed project will be made to comply with any future changes in this regard, and planners should track potential water quality standards that may affect future development.

The FEIS should describe the process whereby the permitting agency and project proponent will identify, characterize, and mitigate water quality impacts from "emerging contaminants" that may be found in groundwater and/or have new regulatory limits imposed on their concentrations in groundwater. Mitigating emerging contaminants is particularly problematic to evaluate when the hazard from the emerging contaminant is recognized by the water supplier but the regulatory machinery has not provided a reference standard for mitigation.

Response to Comment 3:

As with all public water systems, WMWD is subject to the adopted maximum contaminant levels (MCL) established by the state and federal governments. "[California Department of Public Health (]CDPH[)] can set the MCL above the level of the PHG if it finds that it is not economically or technically feasible to reduce the contaminant to the PHG level. State law prohibits OEHHA from considering economic issues when it develops a PHG. An MCL is an enforceable standard. This means that when an MCL is established for a specific contaminant, the level of that contaminant in public drinking water systems must not exceed the MCL. The PHG is not an enforceable standard."[5] As stated by the EPA, no MCL has been adopted by CDPH for hexavalent chromium (a.k.a. chromium 6). The federal government currently regulates only total chromium (trivalent chromium plus hexavalent chromium). The current PHG for chromium 6 is a first for California and once the MCL is established, it will also be the first in the nation to address chromium 6 in drinking water. "California's MCL for total chromium was established in 1977, when it adopted what was then a "National Interim Drinking Water Standard" for chromium. . . The U.S. Environmental Protection Agency (EPA) adopted the same standard, but in 1991 raised the federal MCL to 100 µg/L. California did not follow U.S. EPA's lead and stayed with its 50-µg/L MCL for total chromium."[6] When a new MLC is set, all public water systems in the state must comply. WMWD will comply with the law and treat for chromium 6, or any other "emerging contaminants," as necessary.

[5] A fact sheet by the Office of Environmental Health Hazard Assessment, California Environmental Protection Agency, *Draft Public Health Goal for Hexavalent Chromium*, August 2009.
[6] California Department of Public Health, *Chromium-6 in Drinking Water: MCL Update*, accessed on July 15, 2011. (Available at http://www.cdph.ca.gov/certlic/drinkingwater/Pages/Chromium6.aspx)

WMWD is also working closely with other water agencies with interests in the Basin to manage water quality and help all agencies meet drinking water standards. Specifically, with respect to emerging contaminants, WMWD is a party to a Cooperative Agreement with the California Regional Water Quality Control Board Santa Ana Region (RWQCB) and six other water agencies to "protect water quality and encourage the conjunctive uses of imported water in the Santa Ana River Basin." This agreement also established an Emerging Contaminants Working Group, the purpose of which is to: "1) establish a baseline to evaluate fate and transport mechanisms, and potential trends in water quality which is essential to develop a risk-based approach to understanding and managing exposure to ECs; 2) aid federal and state authorities as they set priorities for and determine whether to develop new water quality criteria; and 3) be useful for evaluating the effectiveness of pollution prevention and source control programs."[7]

Comment 4:

Some of the information cited in Section 4.7 (p. 4.7-25) in regards to the Newmark groundwater plumes is not correct. **The DEIS states that the capture requirement for the Newmarks plume is 80%, when, in fact, the capture requirements were 90% for the Newmark plume, 85% for the Muscoy intermediate plume, and 80% for the Muscoy shallow plume. At the present time, the performance of the remedies in place results in 100% capture of all three contaminated plumes. The Newmark Groundwater Site has an Institutional Control in place to require that all new wells or new operating conditions go through a permitting process to prove that the existing EPA remedies would not be affected.**

Response to Comment 4:

It is not clear to where the commenter is referencing since page 4.7-25 or the preceding or subsequent pages do not include the statement that the "capture requirement for the Newmark plume is 80%." There is however, a statement that "The Newmark and Muscoy Operable Units Statement of Work specifies a minimum particle recovery of 85% for the Newmark Plume Front extraction well network and the Muscoy Plume Front extraction well network when these extraction wells are set equivalent to or above the design extraction rates." Language shall be added to this section of the Final SEIR/EIS to note that the current remedies in place result in 100% capture of all three contaminant plumes and that the Newmark Groundwater Site has an Institutional Control in place as follows:

Page 4.7-4 will be changed in the Final SEIR/EIS:

> Newmark Plume and Muscoy Plume: The United States Environmental Protection Agency (EPA) has identified and designated two plumes within the identified "Newmark Groundwater Contamination" site, which consists of area-wide groundwater contamination underlying portions of the city of San Bernardino. The two groundwater plumes border Shandin Hills. On the east side of the site, a contaminated groundwater plume extends for 5 miles and is referred to as the Newmark Plume area. On the west side of Shandin Hills is a 4-mile long contaminated groundwater plume known as the Muscoy Plume area. Although the suspected disposal may have occurred as early as the 1940s, the problem was not discovered until a water supply monitoring program was instituted in 1980. The contaminated groundwater contains volatile organic compounds (VOCs) including TCE and PCE. (EPA) Treatment plants are operating to remove VOC contamination. A total of thirteen extraction wells produce on average approximately 26,000 AFY, which is treated at the four treatment plants. (SAWPA, pp. 179–180) At the present

[7] *Cooperative Agreement to Protect Water Quality and Encourage the Conjunctive Uses of Imported Water in the Santa Ana River Basin*, January 18, 2008. (Available at WMWD.)

time, the performance of the remedies in place results in 100% capture of the contaminants from all three contaminated plumes. The Newmark Groundwater Site has an Institutional control in place to require that all new wells or new operating conditions go through a permitting process to prove that the existing EPA remedies would not be affected.[8]

Page 4.7-25 will be changed in the Final SEIR/EIS:

. . . The Newmark and Muscoy Operable Units Statement of Work specifies a minimum particle recovery of 85% for the Newmark Plume Front extraction well network and the Muscoy Plume Front extraction well network when these extraction wells are set equivalent to or above the design extraction rates. Results of the particle tracking from the Newmark and Muscoy Plumes show that the RCF Conjunctive Use project would not impact the contamination plumes. At the present time, the performance of the remedies in place results in 100% capture of the contaminants from all three contaminated plumes. The Newmark Groundwater Site has an Institutional control in place to require that all new wells or new operating conditions go through a permitting process to prove that the existing EPA remedies would not be affected.[9]

Comment 5:

Sustainable Water Supply Management

Include a description of RCF operations, monitoring, accounting, and management procedures. The RCF proposes conjunctive use of surface and groundwater, whereby purchased imported surface water will be stored in local groundwater aquifers for later recovery when surface water resources are scarce (p. 1.0-1). Conjunctive use can enhance water supply reliability, provided there is accurate monitoring, accounting, and active management of the aquifer to prevent adverse effects.

Recommendations:
The FEIS should include a detailed description of the proposed operations, monitoring, accounting, and management procedures of the proposed RCF. Include a detailed response to the City of San Bernardino Municipal Water District's concerns regarding conjunctive use of the San Bernardino Basin Area, especially the need for a Basin Conjunctive Use Policy.[1] If applicable, include information regarding conjunctive use in the Chino Basin, and whether the Chino Basin is also in need of a Conjunctive Use Policy. The FEIS should describe any existing and/or proposed national, state, and regional groundwater requirements that may apply to the proposed project, such as an aquifer recharge obligation to leave a percentage of replenished water in the aquifer, and raw water treatment requirements.

[8] United States Environmental Protection Agency Region IX, comment letter regarding Draft Environmental Impact Statement for the Riverside-Corona Feeder Project, Bunker Hill Groundwater Basin, San Bernardino and Riverside Counties, California (CEQ #20110017), April 5, 2011.
[9] United States Environmental Protection Agency Region IX, comment letter regarding Draft Environmental Impact Statement for the Riverside-Corona Feeder Project, Bunker Hill Groundwater Basin, San Bernardino and Riverside Counties, California (CEQ #20110017), April 5, 2011.

Response to Comment 5:

Both the San Bernardino and Chino Basins are subject to stipulated judgments as described in the Related Regulations section on pages 4.6-25 through 4.6-27, referred to as the Western Judgment and the Chino Basin Judgment, respectively. The Western Judgment (and stipulated judgments in general) requires the maintenance of a safe yield from the San Bernardino Basin. "The Western Judgment provides for a Watermaster, consisting of a committee composed of two persons appointed by the Court, one nominated by San Bernardino Valley Municipal Water District (SBVMWD) and one by Western Municipal Water District ("WMWD"). The Watermaster is charged with the responsibility of administering the Western Judgment, and all subsequent orders of the Court made pursuant to the Court's continuing jurisdiction. The Watermaster is required to file with the Court annual reports which include, among other information, summaries of extractions by all parties pumping water from the Basin Area, groundwater level measurements, and an accounting of all credits and obligations in the groundwater basin." RCF operation will be accounted for in the annual report. WMWD is also a cooperator in the Cooperative Well Measuring Program[10] which has been collecting and reporting well levels throughout a portion of western Riverside and San Bernardino counties since 1964, so well level information is also readily available annually to evaluate with respect to mitigation measure **MM GWL 2**.

Mitigation measure **MM GWQ 2** describes in detail the management procedures and approach to monitoring groundwater quality for the Project. See **Response to Comment 2**, above.

Currently, there is no policy for conjunctive use in the San Bernardino Basin. However, the Watermaster is conducting a comprehensive review of management policies and procedures with stakeholders, as identified by the City of Redlands and the City of San Bernardino Municipal Water Department in their comments. WMWD is committed to work with the stakeholders in the Basin by being an active participant in conjunctive use of the Basin as evidenced by this project. As the General Manager of WMWD serves as Watermaster with San Bernardino Valley Municipal Water District General Manager, WMWD is keenly aware of and will abide by policies and procedures that come out of the Watermaster review process.

In the Chino Basin Judgment, the Chino Basin Watermaster was appointed to administer and enforce the provisions of the Judgment and any subsequent instructions or orders of the Court. Reporting is required annually. In addition, the Superior Court mandated that the Chino Basin Watermaster develop an Optimum Basin Management Plan (OBMP). The OBMP, developed in 1998, established primary management goals to address issues, needs and interests of the water producers in Chino Basin, including four primary goals: (1) enhance basin water supplies, (2) protect and enhance water quality, (3) enhance management of the Basin, and (4) equitably finance the OBMP (OBMP). In July 2000, the Watermaster's planning process culminated with the adoption of the *Peace Agreement* and certification of the *OBMP Program EIR* (PEIR, SCH#2000041047) that ended over 15 years of litigation within the Chino Basin. In December 2007, the *Peace II Agreement* was approved by the court; its two main features include: the expansion of the desalter program and the strategic reduction in groundwater storage to achieve hydraulic control for the Chino Groundwater Basin. A Subsequent EIR (SEIR) was prepared for the Peace II Program and was certified on October 6, 2010. (Draft SEIR/EIS, p. 4.6-27) The Chino Groundwater Dry-Year Yield Program Expansion (DYYP Expansion) is a proposed conjunctive-use program developed by the Chino Basin Watermaster in association with Inland Empire Utilities Agency (IEUA), MWD, Three Valleys Municipal Water District (TVMWD), and WMWD to implement Program Elements of the

[10] Water Master Support Services and Western Municipal Water District, *Cooperative Well Measuring Program Covering the Upper Santa Ana Watershed, San Jacinto Watershed and Santa Margarita Watershed Fall 2010*, published February 2011; and phone communication between Cathy Perring of Webb Associates and Mr. Steve Mains of Watermaster Support Services, July 15, 2011.

OBMP. (Draft SEIR/EIS, beginning p. 4.6-40) Therefore, WMWD is actively involved in conjunctive use planning efforts in the Chino Basin, as well as the San Bernardino Basin.

Comment 6:

Describe how the RCF complies with sustainable water management principles. EPA advocates sustainable water supply management, which balances existing water supply with demand. Water conservation, efficient use, and diversification of water supply sources are key components of assuring a long-term, sustainable balance between available water supplies, ecosystem health, and water supply demand. Conjunctive use is but one tool in providing water management flexibility and water supply reliability.

Recommendations:
The FEIS should describe how the RCF will meet the following sustainable water management principles:

- Give priority to conservation, water recycling, use efficiency, water trading, and other alternatives to new or expanded storage. Additional water diversions should be approved only in the context of, and consistent with, efficient and environmentally protective use of developed supplies.
- Base water quantities for imported SWP water on long-term sustainable supply. Take into account environmental requirements and potential third-party adverse effects.
- Properly price the water supply. The water supply -- particularly any newly developed supplies-- should not be under-priced. Cheap water supplies are a disincentive to use water efficiently, and misrepresent the true cost of developing new supplies.

To maximize benefits and project flexibility, we recommend Western work with all interested parties to evaluate and integrate available tools for enhancing water management flexibility, supply reliability, and water quality. Other tools to consider for implementation, in conjunction with the RCF, include conservation, appropriate pricing, irrigation and water use efficiencies, operational flexibilities, market-based incentives, water acquisition, voluntary temporary or permanent land fallowing, wastewater reclamation and recycling, and short-term temporary water transfers.

The proposed RCF should be designed to accommodate future shifts in water policy and consideration of in-stream and other public interest beneficial uses in long-term water resource planning.

Response to Comments 6:

WMWD understands that the Riverside-Corona Feeder Project is but one tool in its overall water management strategy and within the larger Santa Ana River watershed as a whole. In fact, the Project was designed specifically to address key aspects of sustainable water management in conjunction and cooperation with other projects, programs, and agencies that are designed to meet other aspects. See also **Responses to Comments 1, 2, 5,** and **7**.

The purpose of Section 6.6 of the Draft SEIR/EIS is to discuss the Project's consistency with applicable regional water plans. In addition to San Bernardino Valley Municipal Water District's Regional Water Facilities Master Plan and California's Colorado River Water Use Plan (California 4.4 Plan), which were evaluated in the 2005 PEIR, the following plans are key to understanding the Project's role and WMWD's level of involvement in sustainable water management in the region:

- Western Municipal Water District, *Updated Integrated Regional Water Management Plan Report*, May 2008. (Available at http://www.wmwd.com/irwmp-weump.htm, accessed July 30, 2009.)
- Upper Santa Ana Water Resources Association, *Upper Santa Ana River Watershed Integrated Regional Water Management Plan*, November 2007. (Available at San Bernardino Valley Municipal Water District.)

WMWD completed an Integrated Regional Water Management Plan (IRWMP) in October 2006. Since that time, there have been many developments related to regional water planning. These developments include preparation of a Draft Water Conservation Master Plan for WMWD, release of a Drought Shortage Allocation Plan by the Metropolitan Water District of Southern California (MWD), judicial decisions affecting availability of State Water Project (SWP), and the publication of Integrated Regional Water Management Plans for neighboring regions. Furthermore, in November 2006, California voters passed Proposition 84, a bond measure specifically addressing Integrated Regional Management Plans. In response to these events, an update of the IRWMP was completed in May 2008.

The purpose of the IRWMP for the WMWD service area is to continue to address long-range water quantity, quality, and environmental planning needs within WMWD's service area. The essence of the IRWMP is the identification and evaluation of water management strategies that could increase local water supply, thereby improving water supply reliability. Additionally, the IRWMP addresses local and regional water quality, environmental, and disadvantaged community issues. The IRWMP also includes discussion of other regional planning efforts that impact water management within the WMWD service area as well as compilation of estimates of water demands by member agencies, water supplies (e.g., local groundwater, recycled water, surface water, and imported water) available to the agencies, and means to coordinate investments in water management, as appropriate, between agencies.

The objectives of the IRWMP are to prepare a comprehensive document to describe WMWD, its member agencies and the local and regional water planning issues; identify and evaluate programs on a regional basis that provide water supply reliability for dry periods as well as short-term MWD outages, address regional surface water, groundwater quality, and environmental concerns particularly as they intersect with water supply, and provide operational redundancy especially for MWD outages; and provide an on-going process with which to evaluate and compare water supply and other water management strategies.

The RCF Project is one of 90 proposals evaluated and included in the IRWMP, each with its own purpose to address all aspects of a comprehensive sustainable water management strategy. Table 5-2 in the IRWMP shows that the RCF Project meets the California Water Plan strategy of "Improve Operational Efficiency and Transfers" as a "conveyance" project; and the "Increase Water Supply" strategy as a "Conjunctive Management & Groundwater Storage" and "Desalination – Brackish and Seawater" project. IRWMP Table 5-3 shows that the RCF Project meets the IRWMP objectives of "New Water Supply," "Basin Water Quality," and "Operational Flexibility (potable)."

On a larger level, in 2005, the Upper Santa Ana Water Resources Association (Association) agreed to develop an Integrated Regional Water Management Plan (IRWM Plan) to address major water management issues for the communities of the Upper Santa Ana River Watershed. The main benefit of

the plan was the development of a process for managing the San Bernardino Basin Area (BASIN AREA). A secondary benefit was to identify regional projects and to receive grant funding for these projects. The plan was developed through the participation of water managers and stakeholders and was finalized in November 2007.

The IRWM Plan Area (Region) covers 852 square miles, approximately 32 percent of the total Santa Ana River watershed. The primary purpose of the IRWM Plan is to assist local agencies with developing tools for optimizing the management and use of the region's water resources while protecting the groundwater basins from water quality degradation and the threat of liquefaction. The IRWM Plan sets forth three principal objectives:

- Water Supply Reliability Improvement,
- Water Quality Protection, and
- Ecosystem Restoration and Environmental Improvement.

which are described in detail in the Draft SEIR/EIS. (Draft SEIR/EIS, pp. 6.0-20 to 21)

This regional IRWM Plan identifies and evaluates over 100 projects and the Riverside-Corona Feeder Project was evaluated and identified as a Tier 1a project that addresses two of the plan's objectives. Table 5-2 in the IRWM Plan shows that the Riverside-Corona Feeder project meets the IRWM Plan objective of "Water Supply Reliability" as a primary objective and meets the IRWM Plan objective subset of "Surface Water and Groundwater Management" as a secondary objective. Additionally, the RCF Project was identified as supporting "conveyance and intertie," and water supply strategies. By being included in this overall regional approach to water management, the RCF Project supports the whole and allows other projects to focus on ecosystem health, conservation, water recycling, or demand management.

To manage demand, WMWD has instituted water conservation and pricing strategies with its customers. They include the WMWD's *Water Use Efficiency Master Plan*, November 2008 (Master Plan), which addresses conservation through sustained outreach to customers, ordinances, and programs such as:

- Selective Efficiency Evaluation Program (free water audits)
- Large Landscape WBIC Direct Installation Program (free smart controllers installed for residences greater than 1 acre)
- Smart Watering Free WBIC Distribution Program (free smart controllers provided)
- Turf Replacement Program
- Multi-family & Hotel/Motel Toilet Installation Program
- Regional Landscape Design Support Program
- Wiser Start Program (free site evaluation and free product & installation of conservation measures for single-family residences)
- Multi-family Sub Metering Pilot Program (install submeters to promote conservation)
- Commercial Drip Irrigation Incentive Program
- Restaurant Pilot Program
- Beauty Shop Pilot Program

WMWD also actively promotes and participates in five water conservation programs sponsored by the Metropolitan Water District of Southern California (MWD). As a result of the Master Plan, WMWD has added staff to implement and administer its conservation efforts.

Water conservation ordinances can also be powerful tools to achieve passive water efficiency. WMWD is developing a "no water waste" ordinance modeled after MWD's which it will implement with its retail customers and encourage its wholesale customers to adopt. WMWD has developed a model landscape ordinance and the County of Riverside has adopted such water conservation ordinance (Ord. 879) based in part on WMWD's work. WMWD is also working on a new construction ordinance that will address such things as upgraded plumbing fixtures, dedicated irrigation meters, and required use of recycled water. (Master Plan, p. 26)

WMWD works with its customers to implement proper pricing for the water supply. It provides supplemental water to the cities of Corona, Norco, a portion of Murrieta and Riverside, and the water agencies of Box Springs Mutual, Eagle Valley Mutual, Elsinore Valley, Lee Lake, and Rancho California. WMWD serves customers in the unincorporated areas of El Sobrante, Eagle Valley, Temescal Creek, Woodcrest, Lake Mathews, and March Air Reserve Base. (Draft SEIR/EIS, p. 2.0-1) WMWD adopted Ordinance 371, Drought Allocation Plan (DAP), on September 3, 2008, in response to MWD's 1999 *Water Surplus and Drought Allocation Plan* ("WSDM Plan"). In addition to addressing the guiding principle of the WSDM Plan, which is to encourage storage of water during periods and surplus to minimize the impacts of water shortages on retail consumers and the economy during periods of shortage, the DAP sets a tiered penalty rate schedule for its wholesale customers to provide a significant incentive to stay within an agency's allocation of imported water and to cover any penalties that WMWD has to pay to MWD.

WMWD's customers are also following suit by establishing water budgets and tiered pricing. For example, in February 2010, the Corona City Council approved Ordinance 3025 to establish tiered water rates and water budgets for Corona Department of Water & Power customers. The new Tiered Water Rates and Water Budgets went into effect in April 2010. Tiered rates and water budgets are effective at promoting efficient water use and resource conservation. They provide enough water for typical but efficient water use indoors and outdoors. Tiered rates also provide a means to charge fair rates based on how water is being used. Inefficient water users will pay a higher cost for water than efficient water users.[11] The Norco City Council adopted an increase in the water and sewer rates Wednesday, March 16, 2011, citing expenses that are outstripping income. The increases are needed, a City staff report said, to pay for higher costs to import water, maintain the water and sewer systems, comply with water-quality standards, pay off debt, and reimburse the general fund for overhead expenses.[12] WMWD is in the process of implementing proposed water budgeted tiered rate structures for its retail customers in Riverside, Murrieta, and elsewhere. The Murrieta rates will take effect October 1, 2011, while the WMWD Board is still considering the rates for Riverside.[13]

Thus, based on its own water management strategies; consistency with and inclusion in regional plans for sustainable water resource management; and its ongoing development of programs, policies, ordinances and pricing to reduce demand and conserve water, WMWD and its development of the RCF Project will conserve and efficiently use water to the benefit of long-term water resource planning.

[11] http://www.ci.corona.ca.us/City-Departments/Department-of-Water--Power/Tiered-Rate-and-Water-Budgets.aspx#Background
[12] http://www.pe.com/localnews/corona/stories/PE_News_Local_D_wrates17.275e3af.html
[13] http://www.wmwdrates.com/murrieta-residential.htm

Comment 7:

Describe benefits and effects of water transfers between local water agencies and groundwater basins. **The Preferred Alternative includes connections with other local water districts' distribution systems. These connections would facilitate the transportation of water from one water agency to another and one groundwater basin to another basin (p. 1.0-2).**

Recommendation:
The FEIS should describe and evaluate the potential benefits and effects of water transfers between local water agencies and groundwater basins.

Response to Comment 7:

"A water transfer is defined in the Water Code as a temporary or long-term change in the point of diversion, place of use, or purpose of use due to a transfer or exchange of water or water rights. Many transfers, such as those among contractors of the SWPPP, do not fit this definition. A more general definition is that water transfers are a voluntary change in the way water is usually distributed among water users in response to water scarcity. Transfers can be from one party with extra water in one year to another, who is water-short that year."[14] This is a basic premise of the inter-basin water transfers proposed by the Project.

As stated on the Department of Water Resources webpage, "The California Water Plan provides a framework for water managers, legislators, and the public to consider options and make decisions regarding California's water future. The Plan, which is updated every five years, presents basic data and information on California's water resources including water supply evaluations and assessments of agricultural, urban, and environmental water uses to quantify the gap between water supplies and uses. The Plan also identifies and evaluates existing and proposed statewide demand management and water supply augmentation programs and projects to address the state's water needs." The Water Plan identifies the general benefits of water transfers, such as those that will result from the Project. "In practice, many water transfers become a form of flexible system reoperation linked to many other water management strategies including surface water and groundwater storage, conjunctive management, conveyance efficiency, water use efficiency, water quality improvements . . . These linkages often result in increased beneficial use and reuse of water overall and are among the most valuable aspects of water transfers. Transfers also provide a flexible approach to distributing available supplies for environmental purposes."[15]

With the construction of the Riverside-Corona Feeder facilities, it is WMWD's primary intent to provide such a "flexible system" as a part of the overall water management strategies for the San Bernardino and Chino Basins. The Project provides the connections needed to facilitate more flexibility in the overall system of water movement in western Riverside and San Bernardino counties. For example, the Bunker Hill Pressure Zone is also referred to as the Area of Historic High Groundwater (AHHG), because water levels have routinely been within 10 feet of land surface. (Draft SEIR/EIS, p. 4.6-3) This area is also immediately adjacent to the San Jacinto Fault and within a few miles of the San Andreas Fault; therefore, this urbanized area is highly susceptible to liquefaction. One benefit the Project may have is to alleviate dangerously high groundwater levels in urban areas of the Basin by providing pumping, treatment and distribution facilities to move water outside the Basin.

[14] Santa Ana Watershed Project Authority, *One Water One Watershed, 2009 Santa Ana Integrated Watershed Plan, An Integrated Regional Water Management Plan Moving Toward Sustainability*, 2009. (Available at SAWPA)
[15] California Department of Water Resources, *California Water Plan*, Update 2009, p. 7-6.

The other aspect of the Project is water banking of SWP water in the San Bernardino Basin when surplus SWP supplies are available for later extraction when supply is scarce. Because WMWD's service area does not include the San Bernardino Basin, this necessitates the movement of this previously-stored water from the Basin for use by WMWD customers in other basin areas. In dry periods when SWP water is needed to serve other beneficial uses in other parts of the state (e.g., environmental benefits in the Sacramento Delta or irrigation for crops which could avoid economic effects), producing previously-stored water will allow WMWD to reduce its demand for imported water.

Also see **Responses to Comments 2, 3** and **4** for discussion of water quality effects of the Project.

Comment 8:

Include a more rigorous evaluation of growth inducing impacts. The DEIS concludes that the RCF will not induce growth because it would not directly increase population or economic growth. The DEIS implies that Western is responding to projected growth within its service area (p. 7.0-2). However, no evaluation or data are provided to demonstrate that the project would not remove obstacles to growth or provide water service to areas not previously served. We note that the Western Replenishment and Extraction Agreement with the San Bernardino Valley Municipal Water District (SBVMWD) states that Western, at its option, may assign and transfer its right to extract such imported water to any plaintiff in the Western case, and such assigned right shall be in addition to any right that such producer may hold, and shall not be constrained by the injunctive provisions of the Judgment in the Western case (Western Judgment)(See p. 6 of Western Replenishment and Extraction Agreement with SBVMWD for the RCF project, Appendix D).

- ***Recommendation:***
  The FEIS should include a more rigorous evaluation of growth inducing impacts. We recommend including a detailed evaluation and data demonstrating that the RCF project would not remove obstacles to growth or provide water service to areas not previously served.

Response to Comment 8:

Growth inducing impacts are discussed in Section 7.2 of the Draft SEIR/EIS and consist of a summary of the 2005 PEIR discussion, which is incorporated by reference, because it is still valid. The Draft SEIR/EIS does not conclude that the RCF will not induce growth. It concludes, "This proposed project is not required for any specific development proposal or even a particular level of development in any given area. Growth is projected to occur throughout the region with or without this project. WMWD looks at local agency projections for growth when formulating its long-term plans, which include the reliability provided by this project." (Draft SEIR/EIS, p. 7.0-3) The discussion states "such a water storage, conveyance, and distribution project may have the potential to remove obstacles to growth" so there is no need to demonstrate that the Project would never indirectly do this.

In addition, the Riverside-Corona Feeder Project pipelines will have no direct retail connections; it will serve wheeling needs among potable water service providers and wholesale customers only through turn-outs in the pipelines. Each agency the Project serves currently provides service to particular geographic area. No new water purveyors will be able to operate in a new area because of this project. "Western [WMWD] provides supplemental water to the cities of Corona, Norco, a portion of Murrieta and Riverside and the water agencies of Box Springs Mutual, Eagle Valley Mutual, Elsinore Valley, Lee

Lake, and Rancho California. WMWD serves customers in the unincorporated areas of El Sobrante, Eagle Valley, Temescal Creek, Woodcrest, Lake Mathews, and March Air Reserve Base. An interconnected water distribution network and a reliable water supply are critical to serve the needs and meet the demands of these water customers." (Draft SEIR/EIS, p. 2.0-1)

"Actual growth is approved at the local level where land use policies and decisions are made by local elected and appointed officials. In an area where growth occurs, such environmental factors are considered within the framework of local land use and regulatory decisions. Future development in any jurisdiction is influenced by many factors, only one of which is the reliability of the water supply. Other factors include such things as General Plan policies and zoning ordinances; the availability of community services and infrastructure, such as sewers, streets and libraries; employment opportunities; and maintenance costs." (Draft SEIR/EIS, p. 7.0-2) No new significant effects or information not previously addressed in the SEIR/EIS was identified by this comment.

RESPONSE TO COMMENTS

STATE AGENCIES

Response to the
State Department of Transportation (Caltrans)
Letter Dated January 26, 2011

Comment 1:

We have completed our review for the noted project which is mostly located within street right-of-way in the Jurupa area of unincorporated Riverside County, portions of San Bernardino County, and cities of San Bernardino, Colton, Rialto, Riverside, and Corona. The project facilities will also run northeast to southwest and generally parallel to Interstate 215 (I-215) and State Route 91 (SR-91).

As the owner and operator of the State Highway System (SHS), it is our responsibility to coordinate and consult with local jurisdictions when proposed development may impact our facilities. As the responsible agency under the California Environmental Quality Act (CEQA), it is also our responsibility to make recommendations to offset associated impacts with the proposed project. Although the project is under the jurisdiction of the City of Riverside due to the Project's potential impact to State facilities it is also subject to the policies and regulations that govern the SHS.

Response to Comment 1:

The above description of the Project is generally correct, however, it is hereby noted that a small portion of the Project is located within street rights-of-way in the city of Redlands, and the large portion of the Project identified above as being within "the Jurupa area of unincorporated Riverside County," is now located within the new city of Jurupa Valley (incorporated July 1, 2011). Until such time as the City of Jurupa Valley makes changes, it has adopted and is operating under the regulatory framework and General Plan of the County of Riverside, as evaluated in the Draft SEIR/EIS for this Project.

The California Department of Transportation (Caltrans) is identified as a Responsible Agency in the Draft SEIR/EIS. Encroachment permits are identified as needed for this Project for crossing of State Route 60, Highway 91, and Interstate 10. (Draft SEIR/EIS, p. 2.0-10) For clarification, the Project will be built within the variety of jurisdictions identified above, not just the city of Riverside, and Western Municipal Water District is the proponent of the Project. No new significant impacts or information not previously addressed in the SEIR/EIS was identified by this comment. No further analysis is required.

Comment 2:

We do not anticipate this project will generate any additional traffic to the SHS. However, due to this project any activities before, during, or construction within, under, or over the State Highway Right of Way, an Encroachment Permit is required.

Permit Requirements:

1. Any proposed alterations to existing improvements within State right-of-way may only be performed upon issuance of a valid encroachment permit and must conform to current Caltrans design standards and construction practices.
2. Review and approval of street, grading and drainage construction plans will be necessary prior to permit issuance. Information regarding permit application and submittal requirements may be obtained by contacting:

Office of Encroachment Permits
Department of Transportation
464 West 4th Street, 6th Floor, MS-619
San Bernardino, CA 92401-1400
(909) 383-4526

Response to Comment 2:

See **Response to Comment 1**, above. A Caltrans Water Pollution Control Plan ("WPCP") will also be submitted as part of the permit process.

As stated on page 4.12-40 of the Draft SEIR/EIS, mitigation measure **MM Trans 13** requires encroachment permits from applicable governing agencies prior to commencement of any construction of the pipeline within their jurisdictional rights-of-way. Standard information included in these permits will also address issues associated with short-term traffic impacts. These governing agencies include, but may not be limited to, City of San Bernardino, Caltrans, City of Colton, City of Jurupa Valley, County of San Bernardino, City of Rialto, City of Riverside, City of Redlands, the Gage Canal Company, and City of Corona. Therefore, encroachment permits will be obtained and no further analysis is required.

Comment 3:

We appreciate the opportunity to offer comments concerning this project. If you have any questions regarding this letter, please contact Joe Shaer at (909) 383-6908 or myself at (909) 383-4557 for assistance.

Response to Comment 3:

Comment noted. No further response is required.

Response to the
State Department of Water Resources
Letter Dated February 28, 2011

Comment 1:

Thank you for the opportunity to review and comment on the Draft Supplemental Environmental Impact Report/Environmental Impact Statement for the Riverside-Corona Feeder Realignment Project (RCF). The notice illustrates the proposal by Western Municipal Water District to construct a new water pipeline to serve portions of San Bernardino and Riverside Counties. In addition, the applicant proposes to install a series of injection and extraction wells to manage the groundwater in the San Bernardino Basin Area. The majority of work for the RCF proposal consists of a 78-inch diameter pipeline that will extend approximately 28 miles across multiple jurisdictions with connections to other Western Municipal Water District facilities. The proposed pipeline realignment near the Central Feeder Connection will cross the Department of Water Resources' (DWR) California Aqueduct, Santa Ana Pipeline (SAPL) near Fairway Drive in the Community of Colton.

Since the proposed water line alignment for the RCF Realignment Project will cross DWR's California Aqueduct, SAPL Right of Way, it will require an Encroachment Permit from DWR prior to the start of construction. Information on obtaining an encroachment permit from DWR can be viewed at:

http://www.doe.water.ca.gov/Services/Real_Estate/Encroach_Rel/index.cfm

Response to Comment 1:

Comment noted and to clarify, only 12,000 linear feet (approximately 2.3 miles) of the approximate 28 miles of pipeline will require pipes up to 78 inches in diameter, not the "majority of work."

As stated on page 4.12-40 of the Draft SEIR/EIS, mitigation measure **MM Trans 13** requires encroachment permits from applicable governing agencies prior to commencement of any construction of the pipeline within their jurisdictional rights-of-way. This will require WMWD to garner a permit from DWR, however, to assure that this is not overlooked, DWR will be added to the list of Responsible Agencies for this Project under CEQA and page 2.0-12 of the Annotated Draft SEIR/EIS will be modified to include the following:

- **California Department of Water Resources (DWR)**
  a) DWR will require coordination and encroachment permit for the crossing of its California Aqueduct, Santa Ana Pipeline near Fairway Drive in the city of Colton.

Comment 2:

Please provide DWR with a copy of any subsequent environmental documentation when it becomes available for public review. Any future correspondence relating to this project should be sent to:

Leroy Ellinghouse, Chief
SWP Encroachments Section
Division of Operations and Maintenance
Department of Water Resources
1416 Ninth Street, Room 641-1
Sacramento, California 95814

In addition, please continue to keep DWR informed of any future actions with respect to the RCF Realignment Project.

If you have any questions, please contact Leroy Ellinghouse, Chief of the SWP Encroachments Section, at (916) 653-7168 or Mike Anderson at (916) 653-6664.

Response to Comment 2:

The above contact will be added to the list of commenting agencies and the distribution list for future information related to this CEQA/NEPA process and the Project's implementation.

Response to the
State Department of Toxic Substances Control
Letter Dated March 3, 2011

Comment 1:

The Department of Toxic Substances Control (DTSC) has received your submitted Notice of Availability of the Environmental Impact Report for the above-mentioned project. The following project description is stated in your document: "The Riverside-Corona Feeder (RCF) project includes a large capacity, 28-mile long water pipeline ranging in diameter up to 78 inches, up to 20 new and existing wells, and appurtenant facilities associated with aquifer storage and recovery. The proposed project is an alternate alignment (herein "realignment") for the RCF previously evaluated in a Program Environmental Impact Report (PEIR) certified May 18, 2005. The RCF would deliver water from the San Bernardino Groundwater Basin (herein "Basin Area" aka "Bunker Hill") and Chino groundwater basin (herein "Chino Basin"). Imported water supplies would be recharged into the Bunker Hill Basin area for later use, taking advantage of available storage capacity. The new alignment will not change the number of wells or the Bunker Hill groundwater extraction described in the 2005 PEIR.

Groundwater supplies are also available to the RCF realignment from the Chino Basin under the Optimum Basin Management Plan from desalted facilities. The purpose of the RCF is to increase firm water supplies, to improve water quality, and to reduce water costs. The project proposes to manage the groundwater levels through the construction of groundwater wells and pumps to deliver the groundwater supply to water users. The new water pipeline will serve portions of San Bernardino and Riverside counties and is sized to move up to 40,000 acre feet of water at 100 cubic feet per second (cfs). This system of storage, extraction and distribution will improve the reliability of WMWD's water supply through the managed storage and distribution of excess imported water and reduce possible water shortages during dry years".

Response to Comment 1:

This is a correct characterization of the proposed Project.

Comment 2:

DTSC sent you comments on the previous EIR on 9/10/2008. Based on the review of the submitted document DTSC has the additional following comments:

1) If it is determined that hazardous wastes are, or will be, generated by the proposed operations, the wastes must be managed in accordance with the California Hazardous Waste Control Law (California Health and Safety Code, Division 20, Chapter 6.5) and the Hazardous Waste Control Regulations (California Code of Regulations, Title 22, Division 4.5). If it is determined that hazardous wastes will be generated, the facility should also obtain a United States Environmental Protection Agency Identification Number by contacting (800) 618-6942. Certain hazardous waste treatment processes or hazardous materials, handling, storage or uses may require authorization from the local Certified Unified Program Agency (CUPA). Information about the requirement for authorization can be obtained by contacting your local CUPA.

2) DTSC can provide cleanup oversight through an Environmental Oversight Agreement (EOA) for government agencies that are not responsible parties, or a Voluntary Cleanup Agreement (VCA) for private parties. For additional information on the EOA or VCA, please see www.dtsc.ca.gov/SiteCleanup/Brownfields, or contact Ms. Maryam Tasnif-Abbasi, DTSC's Voluntary Cleanup Coordinator, at (714) 484-5489.

Response to Comment 2:

The proposed Project is a water pipeline; operations of the pipeline, pump stations, reservoir, and wells will not generate hazardous waste. In an unforeseeable accident or upset situation, where a pipe would break, no hazardous substances would be released, only water.

The Draft SEIR/EIS states that, "Potential impacts related to: 1) the routine transport, use, or disposal of hazardous materials; 2) reasonably foreseeable upset and accident conditions involving the release of hazardous materials into the environment; 3) the impairment of implementation of or physical interference with an adopted emergency response or evacuation plan; 4) hazardous emissions or the handling of hazardous or acutely hazardous materials, substances, or waste within one-quarter mile of an existing or proposed school "were all found to be less than significant in the NOP prepared for this Project (Appendix A)" because no hazardous materials that are unregulated or of such quantities as to pose an environmental risk will be used for Project construction. (Draft SEIR/EIS, p. 4.8-1, paragraph 1)

Additionally, with respect to the construction of the Project encountering previously unknown hazardous materials, mitigation measures **MM Haz 5** and **5a** are included in the Draft SEIR/EIS. To ensure that any agency, such as the new city of Jurupa Valley, which may need assistance with environmental cleanup oversight, are aware of the assistance DTSC can provide, **MM Haz 5** and **5a** will be modified in the Annotated Draft SEIR/EIS as follows:

> "**MM Haz 5:** All environmental investigation and/or remediation shall be conducted under a work plan approved by jurisdictional regulatory agencies overseeing hazardous waste cleanups. For the cities of Corona and Riverside, the local agencies are City of Corona Fire Department and City of Riverside Fire Department. For the cities of San Bernardino, Colton, and Grand Terrace, the enforcement agency is the County of San Bernardino Department of Environmental Health Services. In the unincorporated Riverside County, the

Department of Environmental Health administers a program for the purpose of monitoring establishments where hazardous waste is generated, stored, handled, disposed, treated, or recycled, and to regulate by the issuance of permits, the activities of establishments where hazardous waste is generated. For any jurisdiction that may not be or have access to a responsible party for this purpose, the California Department of Toxic Substances Control shall be used to provide oversight." (Draft SEIR/EIS, p. 4.8-25)

"**MM Haz 5a:** All environmental investigation and/or remediation shall be conducted under a Work Plan approved by jurisdictional regulatory agencies overseeing hazardous waste cleanups. For the city of Redlands, the local agency is City of Redlands Fire Department. For the city of Rialto and county of San Bernardino, the enforcement agency is the County of San Bernardino Fire Department, Hazardous Materials Division. For any jurisdiction that may not be or have access to a responsible party for this purpose, the California Department of Toxic Substances Control shall be used to provide oversight." (Draft SEIR/EIS, p. 4.8-26)

No new significant impacts or information not previously addressed in the SEIR/EIS was identified by this comment. No further analysis is required.

Response to the
State of California, Governor's Office of Planning and Research
Letter Dated March 8, 2011

Comment 1:

The State Clearinghouse submitted the above named Joint Document to selected state agencies for review. On the enclosed Document Details Report please note that the Clearinghouse has listed the state agencies that reviewed your document. The review period closed on March 7, 2011, and the comments from the responding agency (ies) is (are) enclosed. If this comment package is not in order, please notify the State Clearinghouse immediately. Please refer to the project's ten-digit State Clearinghouse number in future correspondence so that we may respond promptly.

Please note that Section 21104(c) of the California Public Resources Code states that:

> "A responsible or other public agency shall only make substantive comments regarding those activities involved in a project which are within an area of expertise of the agency or which are required to be carried out or approved by the agency. Those comments shall be supported by specific documentation."

These comments are forwarded for use in preparing your final environmental document. Should you need more information or clarification of the enclosed comments, we recommend that you contact the commenting agency directly.

This letter acknowledges that you have complied with the State Clearinghouse review requirements for draft environmental documents, pursuant to the California Environmental Quality Act. Please contact the State Clearinghouse at (916) 445-0613 if you have any questions regarding the environmental review process.

Response to Comment 1:

Comment noted. No further response is required.

Response to the
California Department of Fish and Game
Letter Dated March 3, 2011

Comment 1:

The Department of Fish and Game (Department) appreciates this opportunity to comment on the Subsequent Environmental Impact Report for the Riverside-Corona Feeder The Department is responding as a Trustee Agency for fish and wildlife resources [Fish and Game Code sections 711.7 and 1802 and the California Environmental Quality Act Guidelines (CEQA) section 15386] and as a Responsible Agency regarding any discretionary actions (CEQA Guidelines section 15381), such as a Lake and Streambed Alteration Agreement (Section 1600 *et seq.*) or a California Endangered Species Incidental Take Permit (Fish and Game Code Sections 2080 and 2080.1).

For this project the Department will be acting as a Trustee and Responsible Agency. As per Section 15096 of the California Environmental Quality Act statute, as a Responsible Agency the Department is obligated to focus its comments on any shortcomings in the CEQA document, the appropriateness of the CEQA document utilized, and additional alternatives or mitigation measures which the CEQA document should include.

The site is located in the County of Riverside and County of San Bernardino, in the cities of San Bernardino, Colton, and City of Riverside.

The 28-mile long water pipeline would collect water from the San Bernardino basin area and the Chino Basin. Imported water would be recharged into the Basin area. The project components are the 78 inch pipeline, 20 new or existing groundwater wells, groundwater treatment facilities, water storage, pumping facilities and recharge basins. The system is designed to deliver a maximum of 40,000 acre-feet per year, although deliveries are expected to be between 6,000 and 9,000 acre-feet per year.

Response to Comment 1:

Comment noted. The Draft SEIR/EIS identifies the Department as both a Trustee and Responsible Agency. (Draft SEIR/EIS, p. 2.0-10) The project is generally correctly described; however, portions are also proposed to be located within the cities of Redlands and Rialto. In addition, the project is also located within the newly incorporated city of Jurupa Valley.

Comment 2:

MSHCP

The project is located partially within the boundary of the Western Riverside Multiple Species Habitat Conservation Plan (MSHCP) and is subject to the provisions and policies of

that plan. The MSHCP is a Natural Communities Conservation Plan that provides coverage for 146 species and up to 510,000 acres. Participants in the MSHCP are issued take authorization for covered species and do not require Federal or State Endangered Species Act Permits. The plan also has requirements for species with additional survey/conservation requirements. These include fourteen (14) Narrow Endemic Plant Species, thirteen (13) Criteria Area Plant Species, seven (7) animals with specific survey area requirements, six (6) species associated with riparian/riverine areas and vernal pool habitats, and an additional 28 species deemed not yet adequately conserved.

The project alignment goes through the Jurupa Area Plan of the MSHCP, specifically Critera Area Cell Numbers 22, 55, and 617. Portions of the project also occur within the Narrow Endemic Plant Species Survey Area, as well as the survey area for the western burrowing owl.

Response to Comment 2:

Comment noted. The portion of the Project which is located within the MSHCP boundary is the portion located within Riverside County.

Comment 3:

The DEIR should specify whether the project will obtain take in Riverside County through the Multiple Species Habitat Conservation Plan as a Participating Special Entity or will need to obtain take through a CESA permit.

Should the applicant choose not to process the development project through the MSHCP for covered species, then the project is subject to the Federal Endangered Species Act and/or the California Endangered Species Act (CESA) for threatened and endangered species. A CESA Permit must be obtained if the project has the potential to result in "take" of species of plants or animals listed under CESA, either during construction or over the life of the project. CESA Permits are issued to conserve, protect, enhance, and restore State-listed threatened or endangered species and their habitats. The Department's CESA Incidental Take Permit state that a project must fully minimize and mitigate impacts to State-listed resources.

Response to Comment 3:

Western Municipal Water District ("WMWD") as Lead Agency has decided to participate in the MSHCP to mitigate for impacts to sensitive biological resources for those portions of the project that are located within Riverside County. Within Riverside County, "impacts to protected species covered by the MSHCP would be mitigated through compliance with the MSHCP." (Draft SEIR/EIS, p. 4.3-26 paragraph 8) WMWD met with the Resource Conservation Authority (RCA) to discuss what would be required to become a Participating Special Entity (PSE) for this Project. A PSE application form has been submitted to the RCA for this project. Additional focused surveys have been completed in order to meet the survey requirements of Section 6.3 of the MSHCP. All of the requirements of a PSE will be met prior to the commencement of construction.

As outlined in Section 11.8 of the Implementing Agreement for the MSHCP:

11.8 Participating Special Entity

11.8.1 Take Authorization for Participating Special Entities. Any public facility provider, such as a utility company or a public district, including, but not limited to, a school, water, or

irrigation district, that operates facilities and/or owns land within the Plan Area ("Participating Special Entity") may request Take Authorization for its activities pursuant to the Permits. As set forth below, such activities must comply with all of the terms and requirements of the Permits, the MSHCP and this Agreement.

11.8.2 Grant of Take Authorization to Participating Special Entity. The RCA may grant Take Authorization to a Participating Special Entity for its activities upon compliance with this section. The Participating Special Entity shall submit a complete application for the proposed activity to the RCA containing a detailed description of the proposed activity, a map indicating the location of the proposed activity, an analysis of its potential impacts to Covered Species and their habitats and the MSHCP Conservation Area, and the results of survey and mapping as required pursuant to Section 6.3 of the MSHCP.

Within thirty (30) days of receipt of the complete application, RCA and the Wildlife Agency staff shall review the application. If RCA staff, with the concurrence of the Wildlife Agencies finds that the proposed activity complies with all terms and requirements of the MSHCP, the Permits and this Agreement, is designed and implemented consistent with applicable Criteria if within the Criteria Area and does not compromise the viability of the Permits or the MSHCP Conservation Area, the RCA shall issue a Certificate of Inclusion upon completion or fulfillment of all appropriate requirements as set forth below and shall be deemed a Covered Activity. In the event the proposed activity crosses the MSHCP Conservation Area, RCA staff must make a finding supported by adequate evidence that the activity will result in a biologically equivalent or superior alternative to the MSHCP Conservation Area prior to issuance of a Certificate of Inclusion. The Certificate of Inclusion shall depict on an attached map the lands by parcel number, acreage and owner to which the proposed Take Authorization(s) would apply. In the event that the proposed does not comply with the terms and requirements of the Permits, the MSHCP and this Agreement, and/or compromises the viability of the MSHCP Conservation Area, RCA and Wildlife Agency staff shall meet with Participating Special Entity representatives to attempt to reach a mutually agreeable solution.

11.8.3 Requirements for Participating Special Entities. In addition to the requirements set forth in MSHCP Sections 6.1.2, 6.1.3, 6.1.4, 6.3.2, Participating Special Entities shall also contribute to Plan implementation through payment of a fee based upon the type of proposed activity, which shall be applicable to all activities in the Plan Area. For regional utility projects that will be constructed to serve Development, such as major trunk lines, Participating Special entities shall pay a fee in the amount of 5% of total capital costs or take such other actions as may be agreed to by RCA and the Wildlife Agencies. For such activities that will result in only temporary impacts and disturbance, Participating Special Entities shall pay a fee in the amount of 3% of total capital costs or other appropriate measures as may be agreed to by the RCA and the Wildlife Agencies. Public district or agency project that will be constructed to serve Development, such as new schools and treatment plants, inside the Criteria Area shall be designed and implemented pursuant to the Criteria as described in Section 3.3 of the MSHCP and all other requirements of the MSHCP, including payment of Local Development Mitigation fees as adopted for commercial and industrial Development. For such activities outside of the Criteria Area, contribution will consist for payment of Local Development Mitigation Fees as adopted for commercial and industrial Development Mitigation Fees as adopted for commercial and industrial Development. All fees shall be either collected by, or submitted to, the RCA. All obligations must be satisfied prior to impacts to Covered Species and their habitats.

Therefore, Take Authorization for project impacts to plant and animals in Riverside County and listed under the Federal Endangered Species Act (ESA) and/or the California Endangered Species Act (CESA) and covered by the MSHCP, will be obtained by compliance with the MSHCP as a PSE.

The commenter incorrectly states that, "should the applicant choose not to process the development project through the MSHCP for covered species, then the project is subject to the Federal Endangered Species Act and/or the California Endangered Species Act (CESA) for threatened and endangered species." To clarify, the project is required to comply with the ESA or the CESA regardless of participation in the MSHCP. If a project will require the issuance of "take authorization" from the USFWS and/or CDFG it can be obtained from the RCA through compliance with the MSHCP as a PSE or through Section 7 Consultation with USFWS and/or a CESA Incidental Take Permit (CESA ITP), or the CDFG can adopt the USFWS biological opinion under a Fish and Game Code Section 2080.1 consistency determination.

No new significant impacts or information not previously addressed in the SEIR/EIS were identified by this comment. No further analysis is required.

Comment 4:

San Bernardino County does not have an approved multi-species plan and therefore any take of State-listed endangered or threatened species requires a California Endangered Species Act Incidental Take Permit (CESA ITP). Any take of a federally-listed endangered or threatened species requires compliance with the Federal Endangered Species Act.

Response to Comment 4:

The parts of the Project to be built in San Bernardino County consist of up to five (5) wells and the Central Feeder Connection located in unincorporated San Bernardino County and City of Redlands, and the Northern Reach portion of the Project (which traverses portions of the cities of Rialto, Colton, and San Bernardino). For these areas that are not covered by the western Riverside County MSHCP, mitigation measures have been included in Section 4.3 – Biological Resources, on pages 4.3-42 through 4.3-48 of the Draft SEIR/EIS, to address and minimize potential impacts to state- or federally-listed endangered species. The biological surveys conducted for the Project concluded that the following ESA and/or CESA listed species have habitat within the Northern Reach and could potentially be impacted by construction of the project: Delhi sands flower-loving fly (DSF), least Bell's vireo (LBV), southwestern willow flycatcher (SWWF), California gnatcatcher (CAGN), and the Santa Ana sucker (SAS). The SEIR/EIS identifies numerous and specific mitigation measures (**MM Bio 1, 3a, 3b, 5, 19, 20a**, and **21a**) to reduce potential impacts to these species that may occur in San Bernardino County to less than significant levels. These mitigation measures outline avoidance measures, if habitat is occupied and would be affected based on final engineering design, to eliminate potential impacts and the need for incidental take authorization pursuant to the ESA and CESA. If avoidance measures are infeasible, these mitigation measures outline the requirement to consult with USFWS for Take Authorization. The USFWS, as part of consultation, would identify any additional design or construction, restoration, or compensation measures to reduce potential impacts to listed species to the greatest extent feasible. These measures may include but are not limited to:

- Timing of construction to avoid nesting season for birds and flight season of DSF (**MM Bio 1, 4, 19,** and **20a**);

- Noise barrier and monitoring to ensure sensitive areas are not exposed to excessive noise during construction (**MM Bio 3a and 5**); and
- Construction setbacks, or buffers, from sensitive areas (**MM Bio 4, 19, 20a**, and **21a**).

As outlined on page 4.3-50 of the Draft SEIR/EIS, implementation of design features and mitigation measures, the project will result in less than significant impacts to biological resources, including federally endangered species:

> Based on the biological resource evaluations prepared by Glenn Lukos Associates and Brian F. Smith and Associates (Appendix C), and after the mitigation measures, avoidance, and minimization approaches identified above are implemented, potential adverse impacts associated with special-status species; both plant and wildlife, as well as special-status communities/habitats, will be reduced to a **less than significant** level.

Of the listed species above that may occur in the Northern Reach in San Bernardino County, only the least Bell's vireo and the southwestern willow flycatcher are listed as endangered or threatened under the CESA. Therefore, if avoidance measures are infeasible as outlined above, consultation with CDFG in addition to USFWS would be required for appropriate Take Authorizations. The following clarifications will be made in Section 4.3 Biological Resources discussion (p. 4.3-37) and mitigation measures applicable to least Bell's vireo and southwestern willow flycatcher (**MM Bio 3a and 4a**) in San Bernardino County.

> The least Bell's vireo is a federally-listed and state endangered species that is known to occur within the Santa Ana River (Central Reach) and has some potential to occur in association with southern willow scrub scattered throughout the proposed RCF realignment (Northern Reach). The majority of potentially suitable habitat is associated with the Santa Ana River crossing. The Central Reach traverses federally-designated critical habitat at the Santa Ana River. Potential impacts to least Bell's vireo will be avoided through design considerations. Jack and bore construction will be used for pipeline installation across the Santa Ana River. The temporary or permanent loss of occupied habitat within the Northern Reach would constitute a take of least Bell's vireo, and would require authorization from USFWS and CDFG. Any take of least Bell's vireo would be expected to be a significant impact prior to mitigation. Compliance with **MM Bio 3a and 3b,** and **MM Bio 5** would reduce potential impacts from the project construction on least Bell's vireo to **less than significant** levels.
>
> The southwestern willow flycatcher is a federally and state-listed endangered species and has some potential to occur in association with riparian forest scattered throughout the proposed RCF realignment (Northern Reach). The majority of potentially suitable habitat is associated with the Santa Ana River crossing (Central Reach). Potential impacts to southwestern willow flycatcher will be avoided through design considerations. Jack and bore construction will be used for pipeline installation across the Santa Ana River. The temporary or permanent loss of occupied habitat within the Northern Reach would constitute a take of southwestern willow flycatcher, and would require authorization from USFWS and CDFG. Any take of southwestern willow flycatcher would be expected to be a significant impact prior to mitigation. With compliance with **MM Bio 3a and 3b** and **MM Bio 5**, impacts would be considered **less than significant**.
>
> **MM Bio 3a:** Should construction occur during the breeding season for the least Bell's vireo (LBV) or southwestern willow flycatcher (SWWF) (March 15 through September 15), protocol-level surveys shall be conducted prior to construction at the following locations: the Santa Ana River (Reach A or Central Reach), Spring Brook Wash (Reach B), the riparian vegetation along

the Mockingbird Canyon alignment (Reach E), potentially suitable habitat in the Northern Reach (as identified in the Glenn Lukos Associates, Inc. 2008 report), and the drainage located south of the Corona Landfill (Reach H); or presence can be assumed. If surveys document the presence of LBV and SWWF, impacts to LBV and SWWF would be mitigated below the level of significance when occupied riparian forest/woodland/scrub is fenced and direct impacts are avoided and construction within 500 feet of occupied habitat occurs only between September 15th and March 15th to avoid indirect impacts to nesting LBV. If avoidance is not feasible, a temporary noise barrier shall be used during construction, at the appropriate location(s), in coordination with CDFG and the USFWS. The noise barrier shall attenuate noise levels to 60 dBA or less, at the edge of breeding habitat. If surveys indicate that these species are not present, this measure will not be required. Additional or alternative measures to avoid or minimize adverse project effects to LBV and SWWF, as identified by the USFWS in Section 7 Consultation and CDFG, shall be implemented. However, if all avoidance measures cannot be implemented such that "take" of LBV and SWWF is avoided, Take Authorization from USFWS through Final Biological Opinion and Incidental Take Statement and from CDFG through issuance of a CESA ITP or compliance with Fish and Game Code Section 2080.1, will be obtained.

MM Bio 4a: Should construction occur during the breeding season for the coastal California gnatcatcher (March 15 through September 15), a protocol-level survey shall be conducted prior to construction at Spring Brook wash (Reach B) and the Northern Reach (within Riverside County as identified in the Glenn Lukos Associates, Inc. 2008 report), in the vicinity of the proposed project; or presence can be assumed. Focused presence/absence surveys consist of either 1) six surveys conducted no less than one week apart between March 15 and June 30 or 2) nine surveys conducted no less than two weeks apart during the remainder of the year. Surveys must be conducted by a biologist who holds the appropriate Section 10(a)(1)(A) permit. Surveys in which the species is not detected are considered valid for one year and should be repeated within one year of work commencing.

If surveys document absence of CAGN no additional avoidance or minimization measures are required. If surveys document the presence of CAGN impacts to CAGN would be mitigated below the level of significance when occupied coastal sage scrub is fenced and direct impacts are avoided and construction within 500 feet of occupied habitat occurs only between September 1 and February 15 to avoid indirect impacts to nesting CAGN. If avoidance is not feasible, a temporary noise barrier shall be used during construction, at the appropriate location(s), in coordination with CDFG and the USFWS. The noise barrier shall attenuate noise levels to 60 dBA or less at the edge of breeding habitat. Additional or alternative measures to avoid or minimize adverse project effects to CAGN, as identified by the USFWS in Section 7 Consultation, shall be implemented. However, if all avoidance measures cannot be implemented such that "take" of LBV and SWWF is avoided Take Authorization from USFWS through Final Biological Opinion and Incidental Take Statement and from CDFG through issuance of a CESA ITP or compliance with Fish and Game Code Section 2080.1 will be obtained.

The conditions of the ESA Take Authorization and CESA ITP, which would include any additional measures identified by USFWS and/or CDFG to reduce potential impacts to listed species to the greatest extent feasible, will reduce potential impacts to less than significant. No new significant impacts or information not previously addressed in the SEIR/EIS were identified by this comment. No further analysis is required.

Comment 3:

Recommendations

Per section 15096 of the CEQA statute, as a Responsible Agency the Department is obligated to focus its comments on any inadequacies of the CEQA document and additional alternatives or mitigation measures which should be included in the CEQA document. As a Responsible Agency the Department will be obligated to consult the final CEQA document to prepare a Lake and Streambed Alteration Agreement or a California Endangered Species Incidental Take Permit. If the final CEQA document fails to identify and adequately mitigate all of the impacts of the proposed project and any alternatives, the project proponents will be required to reinitiate the CEQA process at their expense, or fund another CEQA process under the direction of the Department to identify and adequately mitigate all impacts associated with any Department discretionary actions.

The Department recommends that the Lead Agency clarify the issues raised below and provide a response to these comments in the Final Environmental Impact Report (FEIR) or subsequent CEQA document. The problem with this project is that the direct and indirect impacts from construction are not known because this analysis depends upon the timing of construction (nesting and breeding avoidance), the presence of threatened or endangered species as determined by future protocol surveys, and the choice of construction methodology (micro-tunneling or trenching). Therefore, the Department cannot issue a California Endangered Species Act Incidental Take Permit or 1600 Lake and Streambed Alteration Agreement based upon the information contained in this document. For this reason future CEQA processing will be required by the Department for projects where it has Responsible Agency authority.

1. Up-to-date biological surveys (within one year), including protocol surveys for listed species. Surveys should be conducted prior to the commencement of construction;
2. An analysis of direct and indirect, temporary and permanent impacts to sensitive biological resources (least Bell's vireo, California coastal gnatcatcher, arroyo toad, Delhi sands flower-loving fly, Santa Ana sucker and southwestern willow flycatcher);
3. A monitoring and maintenance plan for revegetated or created native habitat areas;
4. Mitigation measures or project changes to offset the loss of riparian habitat, listed riparian species and designated species of special concern;
5. A detailed jurisdictional delineation of State Waters to identify and analyze direct, indirect, temporary and permanent impacts;
6. Submittal of a 1600 Lake or Streambed Alteration Agreement Notification form for impacts to State jurisdictional waters;
7. An analysis of impacts to federal critical habitat and potential impacts to federally listed species;
8. Mitigation for the loss of critical habitat and/or impacts to federally listed species;
9. Submittal of a California Endangered Species Act Incidental Take Permit if future protocol surveys find there will be take of these species;
10. The location and number of new wells and an assessment of potential impacts to the groundwater basins and native vegetation from these wells.

Response to Comment 5:

As outlined in Section 2.0, Introduction of the SEIR/EIS, Subsection 2.3.3, Breadth of Environmental Analysis (p. 2.0-8), portions of the project were examined at the project level and other portions at the programmatic level:

> As discussed above, this SEIR will only contain the information necessary to make the previous EIR adequate for the revised project. However, the level of analysis provided in this SEIR will reflect that of both a Project EIR and Programmatic EIR. The Mockingbird Connection of the proposed project will be examined at the Project level because that portion and Reaches E, F, and G (already analyzed in a certified EIR) will be constructed in the short term (i.e., construction could begin within the next two years and is projected to be completed by 2013). Likewise, the Central Reach and Clay Street Connection of the proposed project will be examined at the Project level because that portion is expected to be constructed within the next few years. Thus, the Central Reach, Clay Street Connection, and Mockingbird Connection will be analyzed in detail such that construction could begin without further environmental analysis. The Central Feeder Connection, the Northern Reach, and Reach H are expected to begin construction in later phases, with the Northern Reach approximately ten (10) years or more, and engineering details are not currently available. Therefore, the Programmatic approach is appropriate for the Central Feeder Connection, Northern Reach, and Reach H. *CEQA Guidelines* Section 15168 states that a Program EIR should be prepared when a series of actions that can be characterized as one large project and are related either: 1) geographically, 2) as logical parts in the chain of contemplated actions, 3) in connection with issuance of rules, regulations, plans, or other general criteria to govern the conduct of a continuing program, or 4) as individual activities carried out under the same authorizing statutory or regulatory authority and having generally similar environmental effects which can be mitigated in similar ways. The Northern Reach and Central Feeder Connection are related geographically and may be constructed in phases that are logical parts in the chain of contemplated actions. At the time these facilities are proposed for construction, further environmental analysis may be required. Reach H was evaluated in the original 2005 Project Alignment PEIR.

Specific direct and indirect impacts are known and were analyzed as part of the SEIR/EIS. For these portions of the project, the alignment construction timing and impact footprint are known and included in the analysis. Although not all construction level details of future phases of the project are known at this time, the sensitive biological resources within the future phase alignments were evaluated and future potential direct and indirect impacts were analyzed as part of the SEIR/EIS for those portions of the project that were examined at the Programmatic level. The commenter incorrectly indicates that "impacts from construction are not known because this analysis depends upon the timing of construction (nesting and breeding avoidance), the presence of threatened or endangered species as determined by future protocol surveys, and the choice of construction methodology." The analysis does not depend on the timing of construction. Rather, the analysis of impacts was based on the assumption that construction would be conducted year round and included mitigation measures where construction would not occur within or adjacent to habitat of sensitive bird species during the nesting and breeding season. For example, **MM Bio 3a** identifies the construction timing and set back requirements necessary to avoid impacts to LBV and SWWF occupied habitat, if construction will occur during the nesting season. The analysis does not depend on the presence of sensitive species as determined by future protocol surveys. Rather, the analysis was based on protocol surveys for those portions of the project that were examined at the Project level, where avoidance is not feasible. For those portions of the project that were evaluated at the Programmatic level, protocol surveys are required where avoidance is not feasible (**MM Bio 4, 14, 15, 16a, 17, 19, 20a** and **21a**) and additional avoidance and/or minimization procedures (**MM Bio 1, 3a, 4, 5,**

18, 19, 20a, and **21a**) are identified if species are found to be present in the future. As outlined on page 4.3-33 of the Draft SEIR/EIS (below), the method of construction used across the Santa Ana River and other sensitive waterways, will include jack and bore underneath the waterways where feasible to avoid sensitive habitat and species.

> **Design Considerations/Avoidance**
> Segments of the proposed RCF Realignment Alternative and Realignment Alternative with Additional Connections that extend across the Santa Ana River and other watered areas, are planned to include jack and boring underneath the waterways, where feasible. This would avoid impacts to the waterways, associated riparian vegetation, and habitat for sensitive species. The La Sierra Pipeline Connection will be constructed within the existing roadway, therefore, all work—including staging areas and spoil storage—will occur within the existing roadway. This will avoid impacts to Stephens' kangaroo rat and California gnatcatcher habitat.

However, in the event that the jack and bore construction method across waterways is not feasible, the Draft EIR-EIS identifies additional mitigation measures that must be implemented if trenching is used for construction in order to reduce potential impacts to sensitive biological resources to less than significant levels.

The following responses correspond to the commenter's numbering in **Comment 5**:

1. Updated biological surveys were conducted for the portions of the Project evaluated at the project-specific level within Riverside County in order to meet the requirements of the MSHCP as a PSE. As outlined above, the other portions of the Project are evaluated programmatically and future surveys will only be completed if avoidance measures cannot be implemented. If avoidance is possible, there would be no significant impact and no mitigation would be required.

2. As mentioned above, specific direct and indirect, temporary and permanent impacts to sensitive biological resources are known and were analyzed as part of the SEIR/EIS. An analysis of potential impacts to these species is included in the SEIR/EIS, page 4.3-37 for least Bell's vireo, page 4.3-36 for coastal California gnatcatcher, page 4.3-36 and 37 for Delhi sands flower-loving fly, page 4.3-37 and 38 for Santa Ana sucker, and page 4.3-37 for southwestern willow flycatcher. As outlined in the Draft EIR-EIS, page 4.3-13 and in **Tables 4.3-C1** and **C2**, **Special Status Wildlife Species with On-site Occurrence Potential**, the arroyo toad was not identified in the biological assessment as having the potential to occur within the proposed Realignment Alternative pipeline and/or the Realignment Alternative with Added Connections. **MM Bio 1** and **2** outline what is required in order to reduce potential impacts to arroyo toad to less than significant levels for the Reach A crossing of the Santa Ana River.

3. The SEIR/EIS identified mitigation measures required to reduce potential impacts from the project, including those to sensitive vegetation, to less than significant levels. **MM Bio 9** outlines potential options, or combinations thereof, for reducing impacts to sensitive vegetation—including riparian habitat—and including creation and/or restoration of natural communities. This mitigation will be revised to include a monitoring and maintenance plan for re-vegetated or created native habitat areas as outlined below:

   MM Bio 9: A project-wide 1602 Streambed Alteration Agreement prepared in accordance with CDFG requirements shall be secured by WMWD as the jurisdictional delineation warrants and shall include mitigation measures that are sufficient to reduce direct and indirect impacts to

riparian habitat to a level below significant. The Agreement may include some or all of the following:

- Avoid impacts where possible by shifting the project location or construction timing.
- Minimize impacts.
- Remove invasive species.
- Purchase off-site habitat credits.
- Create and/or restore natural communities and prepare a monitoring and maintenance plan for these areas.
- Avoid sensitive habitats by placing construction staging areas as far away from them as is feasible.
- Limit construction activity to daylight hours to minimize potential impacts related to artificial lighting.
- Require the presence of a qualified biological monitor during all construction activities that are within or near sensitive habitats and areas that have been identified to host the arroyo toad, least Bell's vireo, southwestern willow flycatcher, coastal California gnatcatcher, Stephens' kangaroo rat, or San Bernardino kangaroo rat.

4. Mitigation measures **MM Bio 1, 2, 3a, 3b, 5, 6, 7, 8, 9, 10, 11, 12, 14, 15, 21a, 21b** outlined in the SEIR/EIS, specifically relate to offset the loss of riparian habitat, listed riparian species, and designated species of special concern. As outlined above, the SEIR/EIS identified the design features included in the project to reduce potential impacts to sensitive habitat, including riparian habitat associated with the Santa Ana River.

5. The biotechnical report prepared for the Central and Northern Reaches (by Glenn Lukos Associates) included a Jurisdictional Delineation (Appendix D). The biotechnical reports prepared for the Mockingbird Connection, La Sierra Pipeline Connection, Clay Street Connection, and Central Feeder Connection (by Brian F. Smith and Associates) included a Jurisdictional Determination (Appendix D) and these connections will not affect jurisdictional resources. Reaches E, F, and G were analyzed and covered under the previously-certified EIR. Reach H was also analyzed and covered under the previously-certified EIR and was analyzed programmatically due to the long-term timing of construction. As outlined on pages 4.3-24 and 25 of the SEIR/EIS, a minor unnamed drainage is located in Reach H south of the Corona Landfill and contains degraded riparian habitat. Mitigation measures included in the SEIR/EIS reduce impacts to sensitive biological resources, including jurisdictional drainages, to less than significant levels.

   Impacts to riparian habitat are addressed on pages 4.3-38 and 39 of the SEIR/EIS. Jurisdictional impacts are addressed on pages 4.3-39–40 of the SEIR/EIS. The majority of pipeline alignments and other facility locations are located in roadways or other disturbed areas and do not contain streambeds or wetlands that fall under the jurisdiction of the U.S. Army Corps of Engineers, Regional Water Quality Control Board, or CDFG. As outlined on page 4.3-39, "The proposed RCF realignment contains approximately 17 acres of southern willow scrub community. As this area is generally located adjacent to the Santa Ana River, and construction methods in this area shall include boring and will avoid disturbing sensitive plant communities; therefore, through project design, impacts to riparian habitat and other sensitive habitat are considered less than significant." Also, "The proposed RCF realignment contains approximately 0.8 acre of Coastal and Valley Freshwater Marsh communities. As this area is generally located adjacent to the Santa Ana River, and construction

methods in this area shall include boring, impacts through project design are considered less than significant."

6. See above Response to Comment 5, item 5 regarding jurisdictional impacts. As outlined on page 4.3-33 of the Draft SEIR/EIS (below), the method of construction used across the Santa Ana River and other sensitive waterways will include jack and bore underneath the waterways where feasible to avoid sensitive habitat and species. Therefore, to the greatest extent feasible, streambed and jurisdictional drainages are avoided by the project, and if avoided, a 1600 Lake or Streambed Alteration Agreement is not required to be submitted. An unnamed drainage, that may qualify as CDFG jurisdiction, is located in Reach H, which is covered programmatically as it is not imminently scheduled for construction. As the design has not been completed for this reach, the exact location and project footprint, are also unknown. This information is required to determine the extent of impacts to disclose in a Notification of Lake or Streambed Alteration. Therefore, it would not be appropriate to submit a notification for Reach H at this time. At such time the design has been completed on which a determination of avoidance or extent of impacts to jurisdictional resources could be made, WMWD will submit a Notification to CDFG as well as implement mitigation measures **MM Bio 8** and **9**.

7. An analysis of impacts to federally-listed species was included in the SEIR/EIS on pages 4.3-33 to 38 and also within the mitigation measures on pages 4.3-42–48. Portions of the project alignment are located within U.S. Fish and Wildlife Service designated Critical Habitat for the SAS and LBV (Central Reach), CGN (Mockingbird Connection and La Sierra Pipeline Connection), and the DSF (Northern Reach). As outlined above, crossing of the Santa Ana River along the Central Reach will be completed using jack and bore construction methods to avoid impacts to the river and Critical Habitat, and adjacent to the river the pipeline will be installed in the existing roadway. Also as outlined above, construction of the La Sierra Pipeline will be installed entirely within the existing roadway to avoid impacts to Stephens' kangaroo rat and California gnatcatcher habitat located adjacent to the roadway. Installation of the Mockingbird Connection and Reservoir will impact occupied CAGN and SKR and CAGN Critical Habitat. However, Take Authorization will be obtained from RCA as a PSE and impacts mitigated through compliance with the Plan and payment of mitigation fees.

   The BOR and WMWD met with USFWS for Informal Section 7 Consultation on November 10, 2010. The informal consultation included a discussion of potential project impacts to CAGN, DSF, SKR, LBV, SWWF, SAS, and Critical Habitat and the option for WMWD to participate in the MSHCP as a PSE for the portions of the project in Riverside County. Because the Northern Reach is a future project analyzed programmatically under the SEIR/EIS, future Section 7 Consultation would be conducted with USFWS at such time the design has been completed and which a determination of avoidance or extent of impacts to habitat could be made.

8. As outlined above Response to Comment 5.7, an analysis of impacts to federally-listed species was included in the SEIR/EIS on pages 4.3-33 through 38 and also within the mitigation measures on pages 4.3-42–48. The mitigation measures included in the SEIR/EIS include those required to reduce potential impacts to federally-listed species to less than significant levels. Due to project location and design, impacts to Critical Habitat are largely avoided. The project will result in impacts to occupied CAGN habitat and designated CAGN Critical Habitat at the Mockingbird Tank site. Mitigation measure **MM Bio 24** (page 4.3-48 of the SEIR/EIS) outlines mitigation for this impact.

   MM Bio 24: Section 7 Consultation with USFWS or participation in the MSHCP as a Participating Special Entity (PSE), shall be completed for temporary impacts (both direct and

indirect) from construction activities and permanent impacts from development of the Mockingbird Tank site on occupied California gnatcatcher habitat. Mitigation for the loss of occupied habitat will be achieved by acquisition of replacement habitat at a 1:1 ratio, that is biologically equivalent to the property being disturbed, as agreed upon by USFWS or in compliance with the MSHCP and payment of MSHCP mitigation fees.

During informal Section 7 Consultation with USFWS, an additional option was identified by USFWS for mitigation of impacts to the DSF and habitat; harvesting sand and providing to an established habitat bank for the DSF. Accordingly, mitigation measure **MM Bio 20a** will be revised as follows:

MM Bio 20a: In San Bernardino County within potentially suitable habitat for Delhi sands flower-loving fly (DSF) in the Northern Reach of the project alignment (as identified in the Glenn Lukos Associates, Inc. 2008 report), focused surveys shall be conducted following USFWS protocol by a qualified biologist who holds the appropriate Section 10(a)(1)(A) permit. Presence/absence surveys consist of bi-weekly surveys from August 1 to September 20 for a two-year period within areas of suitable habitat. If surveys document the presence of DSF, impacts to DSF would be mitigated below the level of significance when occupied habitat is fenced, and direct impacts are avoided. If avoidance is not feasible, additional measures to avoid or minimize adverse project effects to DSF and their habitat, as identified by the USFWS in Section 7 Consultation, shall be implemented. The additional measures may include, but not be limited to, some or all of the following:

1. Avoid impacts where possible by shifting the project location or construction timing.
2. Maintain construction sites in sanitary conditions at all times.
3. Avoid sensitive habitats by placing construction staging areas as far away from them as is feasible.
4. Place extracted, surplus, suitable Delhi sands in current DSF conservation areas/banks.
5. <u>Harvest sands and provide to a habitat bank established for the DSF.</u>

9. WMWD will participate as a PSE in the MSHCP and obtain Take Coverage by RCA for impacts from the project located within Riverside County. A CESA ITP will not need to be obtained from CDFG for the project located within Riverside County. For the portion of the project located within San Bernardino County and not covered under the MSHCP, mitigation measures have been included on pages 4.3-42 –through 48 of the SEIR/EIS to minimize and address potential impacts to state-listed and federally-listed endangered species.

   As outlined above in **Response to Comment 4**, of the listed species above, that may occur in the Northern Reach in San Bernardino County, only the least Bell's vireo and the southwestern willow flycatcher are listed as endangered or threatened under the CESA. Suitable habitat for LBV and SWWF is located adjacent to the roadway and pipeline alignment. Mitigation measure **MM Bio 3a** outlines avoidance measures to be implemented to avoid take of LBV and SWWF and the need to obtain Take Authorization. However, if all avoidance measures cannot be implemented such that "take" of LBV and SWWF cannot be avoided, Take Authorization from USFWS in Section 7 Consultation and from CDFG through issuance of a CESA ITP, will be obtained, as identified in the revised **MM Bio 3a**.

10. Regarding the comment on the location and number of new wells, the SEIR/EIR states on page 3.0-23:

> The Central Feeder Connection consists of approximately 6,350 linear feet of an up to 54-inch diameter pipeline located in the San Bernardino Avenue right-of-way between Alabama Street in unincorporated San Bernardino County and Webster Street in the city of Redlands. (Figure 3.0-8, Central Feeder Connection) Adjacent to the Central Feeder Pipeline are up to five new proposed 350 HP x 2,200-gallons-per-minute (GPM) groundwater production wells within the well field identified on Figure 1.0-1 (exact locations not determined) into the San Bernardino Valley Municipal Water District's Central Feeder Pipeline; thereby providing additional means for transporting San Bernardino Groundwater Basin water through regional pipeline facilities that are connected to the Riverside-Corona Feeder project. These five wells are included within the 20 total wells associated with the RCF.

As stated above, the Central Feeder portion of the Project is programmatic and engineering details are not available at this time. No exact well locations are known at this time. However, the well field was evaluated for biological resources. The vegetation types contained in this area include non-native grassland, orchard (orange grove), and urban/developed. The well field site does not contain riparian vegetation or any natural drainage courses. Therefore, the project would not indirectly or adversely affect native vegetation in this area.

No new significant impacts or information not previously addressed in the SEIR/EIS were identified by this comment. No further analysis is required.

Comment 6:

> Biological Resources
>
> General reconnaissance surveys and habitat assessments were conducted on June 9, July 28, and July 30, 2008. Future biological assessments or updates will have to be conducted and should be timed to coincide with protocol surveys (if required) to avoid time delays and the need to repeat surveys. Much of the project will be constructed within existing road right-of-ways.
>
> The biological report breaks the project down into four alignments: northern reach, central reach, combined alignment, and Monroe Street alignment. On-site habitats include Riversidean sage scrub, perennial streambed, freshwater marsh, non-native grasslands, agricultural, orchard, southern willow scrub and mulefat scrub.
>
> The central reach includes 13.1 acres of riparian habitat that has the potential to support least Bell's vireo, southwestern willow flycatcher, and Santa Ana sucker. The northern reach includes 70 acres of mapped Delhi Sands habitat, potentially containing the Delhi sands flower-loving fly. The northern reach has 7 acres of coastal sage scrub.

Twenty-five special-status animal species have the potential to occur along the project alignment. These include the following federally listed species: coastal California gnatcatcher, Delhi sands flower-loving fly, least Bell's vireo (also State listed), Santa Ana sucker and southwestern willow flycatcher (also State listed). Other potential species are: American badger, arroyo chub, burrowing owl, San Diego horned lizard, golden eagle, loggerhead shrike, Los Angeles pocket mouse, northwestern San Diego pocket mouse,, orange-throated whiptail, Santa Ana speckled dace, southern grasshopper mouse, southwestern pond turtle, two-striped garter snake, western yellow-billed cuckoo, yellow-breasted chat, white-tailed kite, northern red-diamond rattlesnake, San Diego black-tailed jackrabbit, and yellow warbler.

The document states that prior to disturbance in DSFL habitat an assessment will be made as to whether protocol surveys are warranted. Prior to construction within 500 feet of gnatcatcher habitat protocol surveys will be conducted to determine if gnatcatcher are present. Construction in least Bell's vireo, southwestern willow flycatcher and arroyo toad habitat are proposed to occur outside of the nesting/breeding season and the document states that a habitat mitigation and monitoring program (HMMP) would be developed for revegetation of habitat. The document also proposes that if the project involves direct impacts to Santa Ana sucker occur, focused surveys for this species would be required.

Therefore, direct and indirect impacts on these State and Federal endangered or threatened species will not be known until construction is commenced, at which time consultations with CDFG or the United States Fish and Wildlife Service will occur. The California Endangered Species Act (CESA) requires that Impacts to State-listed endangered or threatened species be minimized or fully mitigated.

Response to Comment 6:

As outlined in **Response to Comment 3**, WMWD has decided to participate in the MSHCP. Updated biological surveys have been completed during the appropriate survey periods in 2011 to meet the requirements of a PSE.

As outlined on pages 4.3-3 and 4.3-4 of the Draft EIR-EIS, the project area contains the following vegetation types:

> The majority of the project area consists of urban residential and commercial development with areas of disturbed non-native grasslands, which occur in undeveloped fields or lots. Six major vegetation types were mapped within the project alignment, including scrub habitats, freshwater wetland habitats, riparian forest/woodland/scrub habitats, grassland habitats, residential/urban/exotic cover types, and grove/orchard cover types. These associations are broken down into sub-associations and outlined in **Table 4.3-A, Summary of Vegetation Types by Alignment**.

Table 4.3-A
Summary of Vegetation Types by Alignment

Vegetation Type	Proposed Alignment	Monroe Alternative Alignment	Central Feeder Connection	Clay Street Connection	Mockingbird Connection	La Sierra Pipeline Connection
Disturbed Riversidean Sage Scrub	---	---	---	---	---	1.7 acres
Riversidean Sage Scrub	7.2 acres	---	---	---	32.4 acres	50.1 acres
Open Water	3.6 acres	---	---	---	---	---
Freshwater Marsh	0.8 acres	---	---	---	---	---
Non-Native Grasslands	147.6 acres	3.0 acres	49.9 acres	12.6 acres	---	5.1 acres
Residential/Urban/Exotic	1,039.0 acres	189.8 acres	186.2 acres	55.4 acres	49.3 acres	52.1 acres
Field Croplands	3.0 acres	3.0 acres	---	---	---	---
Grove/Orchard	3.7 acres	14.9 acres	40.4 acres	---	84.9 acres	---
Southern Willow Scrub	17.3 acres	---	---	---	---	10.2 acres
Mulefat Scrub	0.9 acres	---	---	---	---	---
Total	1,223.1 acres	210.7 acres	276.5 acres	68.0 acres	166.6 acres	119.2 acres

The listed species that are identified by the commenter with the potential to occur along the project alignment, is consistent with those species identified in **Tables 4.3-C1** and **4.3-C2**, **Special-Status Wildlife Species with On-Site Occurrence Potential**, including those with a low potential to occur on site. Those identified add up to twenty-four, not twenty-five.

As outlined above in **Response to Comment 5**, the Northern Reach and Central Feeder Connection are evaluated programmatically in the Draft EIR-EIS. Therefore, potential impacts from construction of these facilities are discussed generally. In the future when the exact location and footprint of facilities is known, a more specific impact analysis can be completed. Because it may be multiple years before these portions of the project are completed, updated biological surveys that identify the biological resources within the area at that time, would be required if potentially suitable habitat for sensitive species could not be avoided. At the time these facilities are proposed for construction, further environmental analysis may be required. The Draft EIR-EIS did outline, in mitigation measures **MM Bio 19** and **20a**, the requirement of focused protocol surveys for coastal California gnatcatcher (CAGN) and Delhi sands flower-loving fly (DSF) for portions of the Northern Reach in San Bernardino County within potentially suitable habitat, and in mitigation measure **MM Bio 21a**, focused surveys for Santa Ana sucker (SAS) in San Bernardino County within potentially suitable habitat in the Central and Northern Reach.

Mitigation Measure **MM Bio 4a** identified the need for focused CAGN surveys with construction outside of the breeding season at the Spring Brook Wash (Reach B) crossing. **Mitigation 4a** is required if WMWD does not participate in the MSHCP as a PSE (**MM Bio 4b**). However, as WMWD will participate in the MSHCP as a PSE, **MM Bio 4a** is not required.

Mitigation Measure **MM Bio 3a** identified the need for focused LBV and SWWF surveys prior to construction at the following locations: the Santa Ana River (Reach A or Central Reach), Spring Brook Wash (Reach B), the riparian vegetation along the Mockingbird Canyon alignment (Reach E), and potentially suitable habitat in the Northern Reach, if the avoidance requirements identified in the mitigation measure cannot be implemented. The mitigation measure also allows to assume presence without completion of surveys, if avoidance requirements are implemented. **MM Bio 3a** is required for suitable habitat in Riverside County if WMWD does not participate in the MSHCP as a PSE (**MM Bio**

3b). However, as WMWD will participate in the MSHCP as a PSE, **MM Bio 3a** is not required within Riverside County.

The commenter incorrectly states that the document [Draft EIR-EIS] states that, "a habitat mitigation and monitoring program (HMMP) would be developed for re-vegetation of habitat"; this was not included in the Draft EIR-EIS. However, in **Response to Comment 5** (5.3) outlined above, mitigation measure **MM Bio 9** will be revised to include a monitoring and maintenance plan for re-vegetated or created native habitat areas.

Mitigation measure **MM Bio 2** requires a protocol-level survey for arroyo toad at the Santa Ana River Crossing in Reach A. As outlined in the Draft EIR-EIS page 4.3-42, "*Mitigation measure **MM Bio 2** is applicable only to the 2005 Project Alignment crossing of the Santa Ana River (within Reach A), which is replaced with the new alignment of the Central Reach of the proposed RCF realignment.*"

The commenter incorrectly concludes that direct and indirect impacts to state- and federally-endangered or threatened species will not be known until construction has commenced. As outlined in **Response to Comment 5**, above, specific direct and indirect impacts are known and were analyzed as part of the SEIR/EIS. For these portions of the project, the alignment, construction timing, and impact footprint are known and included in the analysis. Although not all construction level details of future phases of the project are know at this time, the sensitive biological resources within the future phase alignments were evaluated and future potential direct and indirect impacts were analyzed as part of the SEIR/EIS for those portions of the project that were examined at the Programmatic level. The SEIR/EIS outlines the design considerations that were incorporated into the project to reduce impacts to sensitive biological resources (page 4.3-33), as well as numerous mitigation measures to reduce potential impacts to sensitive biological resources to less than significant levels.

No new significant impacts or information not previously addressed in the SEIR/EIS were identified by this comment. No further analysis is required.

Comment 7:

There are several issues that are of concern to the Department. First, if the applicant chooses not to process the project through the MSHCP (in Riverside County), a CESA ITP may be required. If State-listed endangered or threatened species are impacted in San Bernardino County, a CESA ITP will be required. The criteria defining the requirements for a CESA ITP are found in Title 14 CCR, Sections 783.4(a) and (b). These require that the take is incidental to an otherwise lawful activity, the impacts of the take are minimized and fully mitigated, the measures to minimize and fully mitigate impacts are roughly proportional to the impact on the species, maintain the applicant's objectives to the greatest degree possible, and are capable of successful implementation. This section also requires that adequate funding is provided to implement the mitigation measures and that issuance of an ITP will not jeopardize the continued existence of a State-listed species.

If these requirements regarding State-listed endangered or threatened species are not satisfied prior to approval of the Final Environmental Impact Report (FEIR), then a subsequent CEQA document must be prepared so that it can be reviewed by the public and comply with the Department's duties as a Responsible Agency under CEQA.

If the project involves the take of a Federal threatened or endangered species the project applicant will have to consult with the United States Fish and Wildlife Service (Service). If the impacts and mitigation from the Service are not included in the CEQA document, a subsequent CEQA document will have to be prepared and reviewed by the Department.

Secondly, if the pipeline route adversely impacts Federally-designated Critical Habitat or habitat for State species of special concern, mitigation must be provided for these as well.

Response to Comment 7:

The majority of the proposed pipeline is located within existing roadways and disturbed areas. Although "the majority of the project area consists of urban residential and commercial development with areas of disturbed non-native grassland, which occur in undeveloped fields or lots," some portions of the proposed alignment and facility locations span or are located within areas that contain sensitive habitat or where sensitive species could occur. Avoidance and mitigation measures were incorporated to reduce potential impacts to sensitive resources to the greatest extent feasible. As outlined in **Responses to Comments 3** and **5**, above, WMWD will participate in the MSHCP as PSE to obtain "Take Authorization" under the Plan. The SEIR/EIS includes mitigation measures for future facilities to be constructed in San Bernardino County. Therefore, a recirculated CEQA document does not need to be prepared. According to State *CEQA Guidelines* Section 15073.5, the issues raised by CDFG will not require recirculation of the EIR/EIS.

As outlined in **Response to Comment 5**, above, the BOR and WMWD met with USFWS for an Informal Section 7 Consultation on November 10, 2010. The informal consultation included a discussion of potential project impacts to CAGN, DSF, SKR, LBV, SWWF, SAS, and Critical Habitat and the option for WMWD to participate in the MSHCP as a PSE for the portions of the project in Riverside County. During the informal Section 7 Consultation with USFWS, an additional option was identified by USFWS for mitigation of impacts to the DSF and habitat; and mitigation measure **MM Bio 20a** will be revised accordingly. USFWS did not specifically identify additional mitigation measures they wanted incorporated. The commenter does not provide any additional mitigation measures or recommended edits to the existing mitigation measures provided in the SEIR/EIS.
As WMWD will participate as a PSE in the MSHCP and obtain Take Coverage by RCA for impacts from the project located within Riverside County, a CESA ITP will not need to be obtained from CDFG for the project located within Riverside County. For the portion of the project located within San Bernardino County and not covered under the MSHCP, mitigation measures have been included on pages 4.3-42 through 48 of the SEIR/EIS to minimize and address potential impacts to state- and federally-listed endangered species.

As outlined above in **Response to Comment 4** of the listed species that may occur in the Northern Reach in San Bernardino County, only the least Bell's vireo and the southwestern willow flycatcher are listed as endangered or threatened under the CESA. Suitable habitat for LBV and SWWF is located adjacent to the roadway and pipeline alignment. Mitigation measure **MM Bio 3a** outlines avoidance measures to be implemented to avoid take of LBV and SWWF and the need to obtain Take Authorization. However, if all avoidance measures cannot be implemented such that "take" of LBV and SWWF cannot be avoided, Take Authorization from USFWS in Section 7 Consultation and from CDFG through issuance of a CESA ITP, will be obtained as identified in the revised **MM Bio 3a**. Because the Northern Reach is a future project analyzed programmatically under the SEIR/EIS, only after the design has been completed, can a determination of avoidance or extent of impacts to habitat be made. If avoidance is not feasible, then Section 7 Consultation with USFWS would be conducted and an application for a CESA ITP would be submitted to CDFG.

No new significant impacts or information not previously addressed in the SEIR/EIS were identified by this comment. No further analysis is required.

Comment 8:

Streambed Alteration Agreements and CEQA

The pipeline route crosses the Santa Ana River, Spring Brook Wash and Mockingbird Canyon. Potential losses of habitats and direct impacts on species were not included in the document because the applicant is proposing to use micro-tunneling techniques to cross waterways. However, if this method was is not deemed feasible, the document states that trenching will have to be done. Trenching would involve direct and indirect impacts to streambeds, open water and associated riparian vegetation.

The document states that impacts due to micro-tunneling would be minor and temporary, involving stress, desiccation and potential defoliation effects on riparian vegetation. Direct and indirect, temporary or permanent impacts to State jurisdictional waters are not identified in the document.

Boring and jacking activities can result in frac-outs, thereby impacting the creek and its associated habitat. Frac-outs commonly occur during directional drilling under streams and in many cases frac-outs have caused harm to sensitive aquatic resources. The Department agrees impacts would be reduced by boring instead of trenching; however, impacts may still occur. The Department requires that the document include clean-up procedures in case of frac-outs during boring.

If the CEQA documents do not fully identify potential impacts to lakes, streams, and associated resources and provide adequate avoidance, mitigation, monitoring, funding sources, a habitat management plan and reporting commitments, additional CEQA documentation will be required prior to execution (signing) of the Agreement. In order to avoid delays or repetition of the CEQA process, potential impacts to a stream or lake, as well as avoidance and mitigation measures need to be discussed within this CEQA document.

The Department opposes the elimination of drainages, lakes and their associated habitats. The Department recommends avoiding the stream and riparian habitat to the greatest extent possible. Any unavoidable impacts need to be compensated with the creation and/or restoration of in-kind habitat either on-site or off-site at a minimum 3:1 replacement-to-impact ratio, depending on the impacts and proposed mitigation. Additional mitigation requirements through the Department's Streambed Alteration Agreement process may be required depending on the quality of habitat impacted, proposed mitigation, project design, and other factors.

We recommend submitting a notification early on, since modification of the proposed project may be required to avoid or reduce impacts to fish and wildlife resources. To obtain a Streambed Alteration Agreement notification package, please call (562) 430-7924.

Response to Comment 8:

The current Project Realignment evaluated in the SEIR/EIS does not cross Springbrook Wash, as shown on **Figure 1.0-2, Realignment Alternative with Additional Connections Preferred Alternative**. However, the original 2005 Alignment did cross Springbrook Wash. The proposed project does not include a new crossing of Mockingbird Canyon. There is existing pipeline underground and within existing roadways that currently cross Mockingbird Canyon. The proposed Mockingbird Connection pipeline will tie into the existing pipelines and will not impact Mockingbird Canyon. The pipeline crossings of the Santa Ana River analyzed in the SEIR/EIS is the crossing along Central Reach alignment, and was evaluated at the project level.

Trenching activities would involve temporary physical disturbance to the Santa Ana River channel and removal of existing riparian vegetation within the construction footprint. As outlined in the SEIR/EIS (page 4.3-25), "Impacts to the riparian community from trenching activities were considered significant. Through implementation of mitigation measures **MM Bio 6**, **7**, and **10**, potential impacts to riparian habitat and other sensitive communities were reduced to less than significant levels." As identified by the commenter, the potential indirect impact to riparian habitat from extraction of water prior to boring activities was identified (page 4.3-25). Therefore, contrary to the commenter's statement, direct and indirect impacts to state jurisdictional waters were identified in the SEIR/EIS. Temporary impacts to state jurisdictional waters (Santa Ana River) were also identified in the SEIR/EIS from boring (including frac-outs) and trenching activities. Permanent impacts to the Santa Ana River and associated sensitive species from boring or trenching activities were not identified as, due to the design and construction methods, permanent impacts are not anticipated.

Page 4.3-25 of the SEIR/EIS states:

> Micro-tunneling and boring were identified as the preferred method of crossing all jurisdictional areas. However, if determined not feasible, open trenching would be utilized. While micro-tunneling techniques, in themselves, would result in no direct impacts to wildlife or vegetation, dewatering was determined to have potential adverse impacts to the riparian vegetation communities, the magnitude of which would depend on the seasonal timing of the activities. Impacts due to micro-tunneling were anticipated to be minor and temporary, possibly involving stress, desiccation, and potential defoliation. These impacts were considered self-correcting once normal hydrology resumed. Open trenching techniques, if utilized, were determined to likely result in adverse impacts to the Santa Ana River, a river that is in the jurisdiction of the CDFG, ACOE, and California Regional Water Quality Control Board (WQCB), its tributaries, other drainages, and jurisdictional riparian vegetation along the 2005 Project Alignment. Trenching activities for pipeline installation would result in excavation activities within the river channel, within federally protected "waters of the United States."
>
> Micro-tunneling and boring activities under the Santa Ana River and all other drainages were found to have the potential to result in the leakage of construction-related materials and subsequently degrade sub-surface flows and/or surface flows, which may result in significant impacts to the existing riparian habitat. Through implementation of mitigation measures **MM Bio 6** through **14**, potential impacts to wetlands and other jurisdictional features were reduced to less than significant levels.

A mitigation measure will be added to implement a frac-out contingency plan if trenching methods are used to cross under state jurisdictional waterways including the Santa Ana River as follows:

> **MM Bio 25:** Should jack and bore (also known as horizontal directional drilling) techniques be utilized to install the pipeline under CDFG or U.S. Army Corps of Engineers jurisdictional waterways (such as the Santa Ana River), a Frac-Out Contingency Plan (included in Appendix D – Biological Resources of the SEIR/EIS) shall be implemented by the contractor for the duration of drilling activities.

The purpose of the Frac-Out Contingency Plan is to minimize the potential for frac-outs, timely detection when a frac-out has occurred, protection of sensitive environmental areas, to ensure a timely and minimal impact response, and ensure appropriate notifications. The Frac-Out Contingency Plan outlines procedures for:

- A qualified biologist to identify and flag sensitive areas to be avoided prior to the start of drilling;
- Continuous monitoring of a qualified biologist during drilling activities;
- On site briefings for workers of the sensitive areas and responsibilities if a frac-out occurs:
- Containment and clean up of frac-out material;
- Restoration/restoration and monitoring;
- Consultation with CDFG;
- Preparation and submittal of incident report.

The Frac-Out Contingency Plan outlines adequate procedures to reduce potential impacts to waterways and associated sensitive habitats and species to less than significant levels.

Even if trenching was utilized at the water crossings, with implementation of mitigation measures **MM Bio 6**, **7**, and **10**, the project would result in less than significant impacts.

As outlined in **Response to Comment 4** and **5**, above, the SEIR/EIS does fully identify the potential impacts to the Santa Ana River, other jurisdictional waterways and associated riparian habitats, as well as provide avoidance and mitigation measures. The project does not identify that there is a potential impact to a Lake as there are no lakes within the project alignments/footprint and the project will not result in impacts to lakes. In **Response to Comment 5** (5.3), outlined above, mitigation measure **MM Bio 9** will be revised to include a monitoring and maintenance plan for re-vegetated or created native habitat areas.

The proposed project does not include the elimination of drainages, lakes, or their associated habitat. Rather, the project is largely located within existing roadways and other disturbed areas such that sensitive biological resources are largely avoided. The proposed pipelines cross a few drainages perpendicularly, minimizing the breadth of the crossing to the greatest extent possible. In addition, in order to further reduce potential impacts to these resources, installation using jack and bore (Horizontal Directional Drilling) is proposed instead of trenching methods. Unavoidable impacts will be reduced to less than significant impacts with implementation of mitigation measures (**MM Bio 1–25**) in the SEIR/EIS.

Neither the California Fish and Game Code Section 1602 nor the *State of California Department of Fish and Game Notification of Lake or Streambed Alteration, Notification Process and Instructions* (Rev. 07/06), available at http://www.dfg.ca.gov/habcon/1600/forms.html, mandates a specific replacement-to-impact ratio. The SEIR/EIS includes mitigation measures that adequately reduce potential impacts to on-site drainages and their associated habitats to less than significant levels pursuant to CEQA. The

SEIR/EIS acknowledges that additional conditions may be required by CDFG through issuance of a Lake or Streambed Alteration Agreement to avoid or mitigate impacts to jurisdictional drainages. As outlined in **MM Bio 9**, revised:

> **MM Bio 9:** A project-wide 1602 Streambed Alteration Agreement prepared in accordance with CDFG requirements shall be secured by WMWD as the jurisdictional delineation warrants and shall include mitigation measures that are sufficient to reduce direct and indirect impacts to riparian habitat to a level below significant. The Agreement may include some or all of the following:
>
> - Avoid impacts where possible by shifting the project location or construction timing.
> - Minimize impacts.
> - Remove invasive species.
> - Purchase off-site habitat credits.
> - Create and/or restore natural communities <u>and prepare a monitoring and maintenance plan for these areas</u>.
> - Avoid sensitive habitats by placing construction staging areas as far away from them as is feasible.
> - Limit construction activity to daylight hours to minimize potential impacts related to artificial lighting.
> - Require the presence of a qualified biological monitor during all construction activities that are within or near sensitive habitats and areas that have been identified to host the arroyo toad, least Bell's vireo, southwestern willow flycatcher, coastal California gnatcatcher, Stephens' kangaroo rat, or San Bernardino kangaroo rat.

In the past and when requested to do so, CDFG staff would conduct consultation with potential SAA applicants to assist in determining if a CDFG jurisdictional lake or streambed occur in a proposed project area and would adversely be impacted by the project and, if so, if there are avoidance or mitigation measures that should be incorporated. However, CDFG staff currently does not conduct this pre-notification consultation. Therefore, in order to solicit input from CDFG staff they direct potential applicants to submit a Notification of Lake or Streambed Alteration Agreement. Per the *State of California Department of Fish and Game Notification of Lake or Streambed Alteration, Notification Process and Instructions* (Rev. 07/06), available at http://www.dfg.ca.gov/habcon/1600/forms.html, a draft CEQA document is required for a completed notification package. Per Section 14.A (page 12 of 19) of the *Notification Process and Instructions* "…a copy of the CEQA, National Environmental Protection Act ("NEPA"), California endangered Species Act ("CESA"), and/or federal endangered Species Act ("ESA") document ***must*** be enclosed with the notification." Therefore, if CDFG imposes additional mitigation requirements through the Streambed Alteration Agreement process, these are not identified until after a Notification is submitted, which requires a Draft CEQA document. Additionally, the commenter does not provide any additional mitigation measures or recommended edits to the existing mitigation measures provided in the SEIR/EIS. Mitigation measure **MM Bio 9**, which covers obtaining a SAA from CDFG, identifies multiple options of mitigation including avoidance, minimization, restoration, and creation as options, or combinations thereof that may be required by CDFG in the SAA.

No new significant impacts or information not previously addressed in the SEIR/EIS were identified by this comment. No further analysis is required.

Comment 9:

The following information will be required for the processing of a Streambed Alteration Agreement and the Department recommends incorporating this information to avoid subsequent CEQA documentation and project delays:

1) Delineation of lakes, streams, and associated habitat that will be temporarily and/or permanently impacted by the proposed project (include an estimate of impact to each habitat type);
2) Discussion of avoidance measures to reduce project impacts; and,
3) Discussion of potential mitigation measures required to reduce the project impacts to a level of insignificance.

Section 15370 of the CEQA guidelines includes a definition of mitigation. It states that mitigation includes:

1) Avoiding the impact altogether by not taking a certain action or parts of an action,
2) Minimizing impacts by limiting the degree or magnitude of the action and its implementation,
3) Rectifying the impact by repairing, rehabilitating, or restoring the impacted environment,
4) Reducing or eliminating the impact over time by preservation and maintenance operations during the life of the action,
5) Compensating for the impact by replacing or providing substitute resources or environments.

In the absence of specific mitigation measures in the CEQA documents, the Department believes that it cannot fulfill its obligations as a Trustee and Responsible Agency for fish and wildlife resources. Permit negotiations conducted after and outside of the CEQA process deprive the public of its rights to know what project impacts are and how they are being mitigated in violation of CEQA Section 15002. Also, because mitigation to offset the impacts was not identified in the CEQA document, the Department does not believe that the Lead Agency can make the determination that impacts to jurisdictional drainages and/or riparian habitat are "less than significant" without knowing what the specific impacts and mitigation measures are that will reduce those impacts.

Response to Comment 9:

As outlined in **Response to Comment 5**, the biotechnical report prepared for the Central and Northern Reaches (by Glenn Lukos Associates) included a Jurisdictional Delineation (Appendix D). The biotechnical reports prepared for the Mockingbird Connection, La Sierra Pipeline Connection, Clay Street Connection, and Central Feeder Connection (by Brian F. Smith and Associates), included a Jurisdictional Determination (Appendix D) and these connections will not affect jurisdiction resources. Reaches E, F, and G were analyzed and covered under the previously-certified EIR. Reach H was also analyzed and covered under the previously-certified EIR and was analyzed programmatically due to the long-term timing of construction. As outlined on pages 4.3-24 and 25 of the SEIR/EIS, a minor unnamed drainage is located in Reach H south of the Corona Landfill, containing degraded riparian habitat. Mitigation measures included in the SEIR/EIS reduce impacts to sensitive biological resources, including jurisdictional drainages, to less than significant levels.

Jurisdictional impacts are addressed on pages 4.3-39–40 of the SEIR/EIS. The majority of pipeline alignments and other facility locations are located in roadways or other disturbed areas and do not contain streambeds or wetlands that fall under the jurisdiction of the U.S. Army Corps of Engineers, Regional Water Quality Control Board, or CDFG. As outlined on page 4.3-33 of the Draft SEIR/EIS (below), the method of construction used across the Santa Ana River and other sensitive waterways, will include jack and bore underneath the waterways where feasible to avoid sensitive habitat and species. Therefore, to the greatest extent feasible, streambed and jurisdictional drainages are avoided by the project and, if avoided, a 1600 Lake or Streambed Alteration Agreement is not required to be submitted. An unnamed drainage that may qualify as CDFG jurisdictional is located in Reach H, which is covered programmatically as it will not be constructed right away but is planned for the future. As the design has not been completed for this reach; the exact location and project footprint are also unknown.

As outlined on page 4.3-33 of the Draft SEIR/EIS (and below), project design considerations are outlined to avoid sensitive biological resources, including streams and associated habitat, where feasible.

> **Design Considerations/Avoidance**
> Segments of the proposed RCF Realignment Alternative and Realignment Alternative with Additional Connections that extend across the Santa Ana River and other watered areas are planned to include jack and boring underneath the waterways where feasible. This would avoid impacts to the waterways, associated riparian vegetation, and habitat for sensitive species. The La Sierra Pipeline Connection will be constructed within the existing roadway all work, including staging areas and spoil storage, will occur within the existing roadway. This will avoid impacts to Stephens' kangaroo rat and California gnatcatcher habitat.

The Draft EIR-EIS identifies numerous mitigation measures that must be implemented in order to reduce potential impacts to sensitive biological resources to less than significant levels. Mitigation measure **MM Bio 9**, which covers obtaining a SAA from CDFG, identifies multiple options of mitigation including avoidance, minimization, restoration, and creation as options, or combinations thereof that may be required by CDFG in the SAA. Additionally, the commenter does not provide any additional mitigation measures or recommended edits to the existing mitigation measures provided in the SEIR/EIS.

As outlined above in **Response to Comments 7** and **8**, the project is largely located within existing roadways and other disturbed areas and therefore due to location largely avoids sensitive biological resources. In addition avoidance measures were identified to further avoid and/or reduce the potential for impacts to sensitive resources including waterways and associated habitat, including boring under waterways. As identified by the commenter, "The Department agrees impacts would be reduced by boring instead of trenching; however, impacts may still occur. The Department requires that the document include cleanup procedures in case of frac-outs during boring." As outlined in **Response to Comment 8**, above, a mitigation measure is added including the requirement for the contractor to implement a Frac-Out Contingency Plan.

Mitigation measure **MM Bio 9** includes: 1) the removal of invasive species, 2) the creation and/or restoration of natural communities with preparation of a monitoring and maintenance plan for these areas, and 3) purchase off-site habitat credits as optional conditions of the SAA, among others. The potentially significant impacts to sensitive biological resources from the project, before implementation of mitigation measures, are due to construction. Once construction is complete, the project will not have potentially significant impacts to sensitive biological resources.

Therefore, the SEIR/EIS does include the following commenter's concerns:

- Identification of impacts to lakes, streams, and associated habitat,
- Avoidance measures to reduce project impacts, and
- Mitigation measures required to reduce project impacts to a less than significant level.

The SEIR/EIS includes specific mitigation measures that outline:

- Avoidance of impacts altogether, by construction timing, confined project footprint,
- Minimizing impacts by confined project footprint and boring techniques,
- Options to rectify impacts by restoring impacted areas (**MM Bio 9** – removal of invasive species, creation and/or restoration of natural communities with preparation of a monitoring and maintenance plan for these areas), and
- Compensation for impacts, by participation (**MM Bio 9** – purchase off-site habitat credits).

Since the project will implement the above specific mitigation measures, the commenter will not be hindered to be able to fulfill its obligations as a Trustee and Responsible Agency for fish and wildlife resources. Although the commenter states that, "Permit negotiations conducted after and outside of the CEQA process deprive the public of its rights to know what project impact are and how they are being mitigated [is] in violation of CEQA Section 15002." Due to the current process of an SAA, as outlined in **Response to Comment 8**, permit negotiations have to be conducted after a draft CEQA document has been prepared. The SEIR/EIS identifies mitigation measures to reduce potentially significant impacts from the project including those to CDFG jurisdictional waterways. Mitigation measure **MM Bio 9**, which covers obtaining an SAA from CDFG, identifies multiple options of mitigation including avoidance, minimization, restoration, and creation as options, or combinations thereof that may be required by CDFG in the SAA. Additionally, the commenter does not provide any additional mitigation measures or recommended edits to the existing mitigation measures provided in the SEIR/EIS. Jurisdictional impacts are addressed on pages 4.3-39–40 of the SEIR/EIS. The majority of pipeline alignments and other facility locations are located in roadways or other disturbed areas and do not contain streambeds or wetlands that fall under the jurisdiction of the U.S. Army Corps of Engineers, Regional Water Quality Control Board, or CDFG. As outlined on page 4.3-33 of the Draft SEIR/EIS (below), the method of construction used across the Santa Ana River and other sensitive waterways will include jack and bore underneath the waterways, where feasible, to avoid sensitive habitat and species. Therefore, to the greatest extent feasible, streambed and jurisdictional drainages are avoided by the project. The SEIR/EIS identified specific mitigation measures required to reduce potential impacts from the project, including those to sensitive vegetation and jurisdictional waterways, to less than significant levels. Therefore, the SEIR/EIS does not deprive the public of its rights to know what project impacts are and how they are being mitigated and is not in violation of *CEQA Guidelines* Section 15002, General Concepts.

No new significant impacts or information not previously addressed in the SEIR/EIS were identified by this comment. No further analysis is required.

RESPONSE TO COMMENTS

REGIONAL AND LOCAL AGENCIES

Response to the
Riverside County Fire Department
Letter Dated January 26, 2011

Comment 1:

With respect to the referenced project, the Riverside County Fire Department has no further comments. All of the impacts have been adequately addressed.

The California Fire Code outlines fire protection standards for the safety, health, and welfare of the public. These standards will be enforced by the Fire Chief.

Response to Comment 1:

Comment noted. No further response is required.

Response to the
Riverside County Flood Control & Water Conservation District
Letter Dated January 26, 2011

Comment 1:

This letter is written in response to the Draft Supplemental Environmental Impact Report/Environmental Impact Statement (DSEIR/EIS) for the Riverside-Corona Feeder Project. The proposed project is an alternate alignment for the Riverside-Corona Feeder (RCF) previously evaluated in a Program Environmental Report certified May 18, 2005. The RCF project includes a large capacity, 28 mile long water pipeline ranging in diameter up to 78 inches, up to 20 new and existing wells, and appurtenant facilities associated with aquifer storage and recovery. Imported water supplies would be recharged into the Bunker Hill basin area for later use, taking advantage of available storage capacity.

The Riverside County Flood Control and Water Conservation District is providing the following comment/concern that should be addressed in the FSEIR/EIS:

The DSEIR/EIS on Page 2.0-11 states "RCFC&WCD will require coordination and may require encroachment permits for any facilities encroaching upon facilities or facilities easements owned by MWD". MWD should be replaced by RCFC&WCD in the FSEIR/EIS.

Thank you for the opportunity to comment on the DSEIR/EIS. Please forward any subsequent environmental documents regarding the project to my attention at this office. Any further questions concerning this letter may be referred to Hilal Elhaddad at 951.955.8582 or me at 951.955.8581.

Response to Comment 1:

Comment noted; the correction will be made accordingly and will be included in the Final SEIR/EIS.

Response to the
Orange County Public Works
Letter Dated February 28, 2011

Comment 1:

The County of Orange has reviewed the : Notice of Completion and Availability of a Draft Supplemental Environmental Impact Report and Draft Environmental Impact Statement (SEIR/EIS) for the Riverside-Corona Feeder Realignment located in the City of San Bernardino and offers the following comments:

Environmental Resources:

In response to your request for input on the subject project, Environmental Resources has reviewed the document, and offers the following comment::

1. The reference on EIR Page 4, 11-10 (last paragraph) to the 2003 Santa Ana Region de minimus permit is outdated. The correct reference is Order R8-2009-0003.

Response to Comment 1:

Comment noted; the correction will be made accordingly and will be included in the Final SEIR/EIS.

Response to the
County of Riverside Transportation and Land Management Agency
Letter Dated March 8, 2011

Comment 1:

Thank you for the opportunity to review and comment upon the Riverside-Corona Feeder Project SEIR/EIS. Based on my review of the alignments shown, I prepared a spreadsheet listing the capital projects in the Riverside County Transportation Improvement Program for FY 2011/12 and the Riverside County Economic Development Agency's transportation projects that may be impacted by the Riverside-Corona Feeder Project. I sent this spreadsheet to you by e-mail approximately two weeks ago. Please share this information with Western Municipal Water District so that the Riverside-Corona Feeder Project takes these Transportation capital projects into account.

I agree with all of the mitigation measures listed in the report and would like to emphasize the importance of having the contractor for the project follow all of the mitigation measures listed in the report in Section 4.12 – Transportation and Traffic. I would also like Western Municipal Water District to contact the Riverside County Transportation Department at the earliest stages of the Feeder Project design so that we can provide the most up-to-date information on all affected transportation capital improvement projects under design and construction in the County and effectively coordinate our respective projects.

Please do not hesitate to call me if you have any questions. My phone number is (951) 955-2091 or you may e-mail me at fkhorash@rctlma.org.

Response to Comment 1:

Comment noted; mitigation measures will be followed as required. WMWD will work closely with all local agencies through which this Project traverses to ensure that, at the time of construction, no conflicts in construction activities and/or traffic congestion occur. WMWD will contact County of Riverside Transportation and Land Management Agency (TLMA) prior to work within road rights-of-way for which TLMA is responsible.

WMWD has received the County's current list of proposed projects and, if timing and locations conflict, will work with the County to address construction timing and/or adjust Project alignments, if necessary. Such adjustments as are necessary in the future to construct the Project facilities will be evaluated to determine if any new or more severe environmental impacts could result and additional CEQA and/or NEPA documentation will be processed.

No new significant impacts or information not previously addressed in the SEIR/EIS was identified by this comment. No further analysis is required.

Response to the
City of Redlands
Letter Dated March 7, 2011

Comment 1:

In response to your agency's, Western Municipal Water District ("Western"), letter and Supplemental Environmental Impact Report/Environmental Impact Statement ("Report") regarding the Riverside-Corona Feeder project, I am providing the following comments. This project involves the extraction of water from the Bunker Hill basin in the city of Redlands for use in your service area. In your agency's Report it states, Western has designed the project facilities to produce up to 40,000 acre feet per year, which will be imported into your service area from the Bunker Hill basin.

Response to Comment 1:

WMWD appreciates the City of Redlands' comments and is equally concerned about the sustainable management of the San Bernardino (a.k.a. Bunker Hill) Basin Area (Basin) with respect to both water quality and safe yield. The Project does involve extraction from the Basin, however, the five proposed wells analyzed in the Supplemental Environmental Impact Report/Environmental Impact Statement (SEIR/EIS) are proposed to be located within San Bernardino County in the area commonly known as the Doughnut Hole. The only proposed facility to be located within the city of Redlands is a pipeline in San Bernardino Avenue. Extraction from these wells could impact wells owned by the City of Redlands and other water agencies, therefore, the SEIR/EIS analyzed potential significant impacts to wells from both a water level (quantity) perspective and a water quality perspective in Sections 4.6 and 4.7 of the SEIR/EIS.

The Project will not have a significant impact to groundwater supplies due to extraction, because under this Project, WMWD cannot extract any more groundwater than it has previously recharged. In addition, the State Water Project (SWP) water that WMWD will use to store in the San Bernardino Basin (the Basin) will be purchased from Metropolitan Water District (Metropolitan) when there is a surplus available; therefore, even statewide, a significant impact to ground and/or surface waters will not result from the Project.

The 40,000 acre-ft per year in **Comment 1**, above, is from the description of the Project that was already approved and evaluated in the certified 2005 Program EIR for the Riverside-Corona Feeder Project. The Project as analyzed in the 2005-Certified Final Programmatic EIR included recharge and extraction of up to 40,000 acre-ft per year and up to the use of 20 different existing and new wells. However, as the Project Description continues in Section 3.0, it clearly spells out additional aspects of the Project that are evaluated in this Supplemental EIR, as follows:

> "Operations of the Preferred Alternative [(the Project)] would include the use of existing and/or new wells, as analyzed in the 2005 Project Alignment Final EIR, and/or the use of new wells analyzed as a part of the Central Feeder Connection, described below. Up to a total of 20 wells could be used to properly manage water extractions associated with the RCF. Not all wells would operate at the same time; approximately 25 percent would be pumping at any one time. Wells may be located in the various well fields evaluated in the 2005 Project Alignment EIR and in the Central Feeder Connection area evaluated herein. . .

> The Central Feeder Connection consists of approximately 6,350 linear feet of an up to 54-inch diameter pipeline located in the San Bernardino Avenue right-of-way between Alabama Street in unincorporated San Bernardino County and Webster Street in the city of Redlands. . . Adjacent to the Central Feeder Pipeline are up to five new proposed 350 HP x 2,200 gallons per minute (GPM) groundwater production wells within the well field identified on Figure 1.0-1 [of the Draft EIR/EIS] (exact locations not determined) into the San Bernardino Valley Municipal Water District's Central Feeder Pipeline; thereby providing additional means for transporting San Bernardino Groundwater Basin water through regional pipeline facilities that are connected to the Riverside-Corona Feeder Project. These five wells are included within the 20 total wells associated with the RCF.
>
> In conjunction with the evaluation of the above Central Feeder facilities in this SEIR/EIS, proposed operations of the Central Feeder Connection were used as the framework for potential groundwater impacts during periods of drought and emergency periods. Analysis provided by Geoscience Support Services, Inc. in March 2010 was based on the following: the RCF is supported by, and fully consistent with MWD's Integrated Resource Plan, the Santa Ana Watershed Project Authority's Integrated Watershed Plan, and the regional water planning efforts for the cities of Riverside, Norco, and Corona, Elsinore Valley Municipal Water District, Jurupa Community Services District, Home Gardens County Water District, Lee Lake Water District, and March Air Reserve Base. Groundwater modeling was performed to assess potential groundwater impacts that might result from the RCF including impacts to the Western Judgment and the Newmark Groundwater Superfund Site. See Sections 4.6 and 4.7 [of the Draft SEIR/EIS] for detailed assumptions and results." (Draft SEIR/EIS, pp. 3.0-22 and 23)

Thus, there will be approximately five wells out of a possible 20 well locations that would be operational at any one time. Each 350 horsepower well is estimated to operate at 2,200 gallons per minute. (Draft SEIR/EIS, p. 3.0-6) With approximately five wells in operation at a time, the estimated extraction rate of the project would not exceed 11,000 gallons per minute. This level of well production equates to approximately 48.61 acre-ft/day. Depending on the amount of water that has been stored in the Basin under this Project (i.e., available water to extract) and the number of days per year pumping might occur, the table below shows example levels of annual extraction that could be achieved if water was available.

Example Number of Days of Production per Year	**Daily Well Production Rate if Five Wells are Pumping (11,000 gpm = 48.61081959008 AF/day)**	**Acre-ft per Year**
100	48.61081959008	4,861
150	"	7,292
200	"	9,722
250	"	12,153
300	"	14,583
365	"	17,743

Based on results of the modeling (Appendix F of the Draft SEIR/EIS), RCF Scenario 1 (least stressful conditions) consists of total artificial recharge (i.e., SWP water) of 42,000 acre-ft and total extraction of 34,500 acre-ft during the 26 years from 2007 through 2032, or an average extraction of 1,327 acre-ft per year; RCF Scenario 2 (most likely conditions) includes total artificial recharge of 150,000 acre-ft and total extraction of 125,800 acre-ft, or an average over the 26 years modeled of 4,838 acre-ft extracted per year; and RCF Scenario 3 (most stressful conditions) includes total artificial recharge of 198,000 acre-ft and

total extraction of 163,300 acre-ft, or an average of 6,281 acre-ft per year. (Draft SEIR/EIS, p. 4.6-32) As shown in the modeling results, some years there may be no water available to extract and some years there may not be a need to extract water, so the system allows for the flexibility and potential to extract multiple years of stored available water. The results of the modeling presented here and modeling results associated with the original 2005 PEIR indicate that the Project (Realignment Alternative with Additional Connections) will have less than significant impacts on groundwater resource levels within the Basin Area. (Draft SEIR/EIS, p. 4.6-33)

No new significant impacts or information not previously addressed in the SEIR/EIS was identified by this comment. No further analysis is required.

Comment 2:

However, model runs identified in the Report were conducted to simulate extractions up to 163,300 acre feet. Because of this, and the fact the 20 wells proposed will have a production capacity of over 70,000 acre feet per year, and the 78 inch pipeline has a carrying capacity of nearly 168,000 acre feet per year, the final build-out capability of the project was not fully understood. The Report also states State Water Project ("SWP") water will be used as recharge water for extractions from the basin. In addition, the Report states recharge activities will occur in existing facilities located within the basin. This could be difficult, if not impossible, as existing facilities are often fully utilized to meet the needs of local agencies. Because of this, additional studies should be conducted to identify what recharge facilities will be available to meet Western's needs, and if necessary, the construction of new facilities should be included and analyzed in your Report and project.

Response to Comment 2:

There are two basic issues identified in this comment: 1) clarification of the build-out capacity of the pipeline versus operation of the Project, and 2) availability of recharge basin facilities. Based on results of the modeling prepared for the Draft SEIR/EIS (Appendix F of the Draft SEIR/EIS), RCF Scenario 1 (least stressful conditions) consists of total artificial recharge (i.e., SWP water) of 42,000 acre-ft and total extraction of 34,500 acre-ft during the 26 years from 2007 through 2032, or an average extraction of 1,327 acre-ft per year; RCF Scenario 2 (most likely conditions) includes total artificial recharge of 150,000 acre-ft and total extraction of 125,800 acre-ft, or an average over the 26 years modeled of 4,838 acre-ft extracted per year; and RCF Scenario 3 (most stressful conditions) includes total artificial recharge of 198,000 acre-ft and total extraction of 163,300 acre-ft, or an average of 6,281 acre-ft per year. (Draft SEIR/EIS, p. 4.6-32) Thus, the 163,300 acre-ft mentioned in the Comment is the total for the 26-year period of the modeling analysis. As some years there may be no water available to extract and some years there may not be a need to extract water, so the system allows for the flexibility and potential to extract multiple years of stored available water. The results of the modeling presented here and modeling results associated with the original 2005 PEIR indicate that the Project (Realignment Alternative with Additional Connections) will have less than significant impacts on groundwater resource levels within the Basin Area. (Draft SEIR/EIS, p. 4.6-33) See **Response to Comment 1** with respect to the project description/operations. Pipe sizes range from 36 inches to 78 inches depending on location, gradient,

connection requirements, etc., and are “maximum” pipe sizes so that maximum construction disturbance areas could be calculated and evaluated. As a result of this Project, WMWD will be able to extract only water that has previously been recharged by this Project so no depletion of the groundwater allocated to the City of Redlands will result.

In addition, the Project does not propose to use all 20 wells at any one time. The 70,000 acre-ft per year mentioned in the Comment is a result of multiplying the capacity of a well by 20 wells (Each 350-horsepower well is estimated to produce at 2,200 gallons per minute. (Draft SEIR/EIS, p. 3.0-6)). For this to occur, over 70,000 acre-ft of SWP excess water would have to have previously been stored in the Basin Area. It would take many years to store this much water based on expected availability of excess SWP water and no extractions under the Project would have occurred. This is a highly unlikely and speculative scenario so it was not appropriate to analyze it as a part of the Project assumptions. As stated in the SEIR/EIS, it is anticipated that approximately five (5) wells will operate at any one time, but operations may warrant the extraction of water in many different locations through agreements with existing well owner/operators and/or the construction of new wells, such as the five (5) proposed in the Doughnut Hole area near Redlands. This flexibility in extraction locations is to facilitate the management strategies identified by the Basin Area Technical Advisory Committee (BTAC) and in accordance with the Western Judgment as overseen by the Watermaster for the Judgment. With five (5) wells in operation at a time, the estimated extraction rate of the Project would not exceed 11,000 gallons per minute. This level of well production equates to approximately 48.61 acre-ft/day. Depending on the amount of water that has been stored in the Basin under this Project (i.e., available water to extract) and the number of days per year pumping might occur, the table below shows example levels of annual extraction that could be achieved if water was available. None of this equates to the suggested amount of 70,000 acre-ft per year.

Example Number of Days of Production per Year	**Daily Well Production Rate if Five Wells are Pumping (11,000 gpm = 48.61081959008 AF/day)**	**Acre-ft per Year**
100	48.61081959008	4,861
150	"	7,292
200	"	9,722
250	"	12,153
300	"	14,583
365	"	17,743

No additional analysis is needed to assess the availability/adequate capacity of the existing recharge basins proposed to be used for recharge by this project. Because surplus SWP water is the sole source of water being utilized for recharge as a part of this project, WMWD can have the delivery of SWP water held until the basins are available to receive more water, such as summer, so that there is no interference with the needs of local agencies to recharge surface water during wetter periods. Under the Certified 2005 PEIR for the RCF Project, 6,000 acre-ft of water have previously been recharged into the San Bernardino Basin Area. No recharge facilities are proposed as a part of this project because the ability of WMWD to recharge water has been proven and the timing of deliveries can be adjusted to meet availability of recharge basin(s). If recharge basin availability becomes a problem for WMWD in the future, evaluation of such potential effects of the construction of such a basin would have to be evaluated under separate environmental documentation.

No new significant impacts or information not previously addressed in the SEIR/EIS was identified by this comment. No further analysis is required.

Comment 3:

Currently, there is no policy for conjunctive use on the basin. However, the Western-San Bernardino Watermaster is conducting a comprehensive review of management policies and procedures with stakeholders. The Report should recognize this review and abide by policies and procedures that occur as a result of the review process.

Response to Comment 3:

WMWD is committed to work with the stakeholders in the Basin by being an active participant in conjunctive use of the Basin as evidenced by this Project. As the General Manager of WMWD serves as Watermaster with San Bernardino Valley Municipal Water District General Manager, WMWD is keenly aware of and will abide by policies and procedures that come out of the Watermaster review process. See also **Response to Comment 1**. In addition, mitigation measure **MM GWQ 2** requires annual monitoring and reporting to avoid and remedy all potential impacts prior to them becoming significant. **MM GWQ 2** (Revised) will be modified in the Final SEIR/EIS (assuming revisions in the Draft SEIR/EIS have been incorporated) in response to comments received from U.S. EPA, City of Riverside, and City of Redlands.

MM GWQ 2 (Revised): To assure that ongoing management of the RCF is coordinated with management of the Basin Area as a whole, monitoring and adaptive management shall be employed.

c) The RCF operations management plan will be developed and tested using the groundwater modeling employed by the Basin Area TAC (or its successor or assignee) on an annual basis. Existing groundwater flow and groundwater quality model(s) shall be used to predict the effects of project operations on groundwater quality. The results of the modeling shall be presented to the BTAC. If the results indicate that the location of pollution plumes will be shifted by project operations such that additional existing 'clean' wells could become contaminated, WMWD shall modify planned operations to avoid the result or otherwise address the modeled situation to the satisfaction of the BTAC. Examples of operational modifications that could be used, are provided in the following table.

d) When a new well is drilled, indicator wells in the vicinity that could be affected by Project operation will be selected to become part of the annual operations management plan. If water quality testing at any indicator wells (which are already tested regularly) suggests that the replenishment and pumping regime of the proposed project operation is causing drinking water quality in a given well to become newly contaminated or to worsen due to the Project~~, exceed state drinking water standards~~, production and/or spreading in the area(s) contributing to the contamination, shall cease until a remedy is identified and implemented. ~~adverse affects associated with the project no longer occur.~~ Such remedies may include but not be limited to the following:

Contamination Remedy Examples and Method Priorities

New Wells Drilled for Project Operations		
Treatment Option	First Priority Methods	Secondary Priority Methods
Avoidance	• Move or Avoid Production in a Contaminated Location	• Wellhead treatment
Wellhead Treatment[1]	• Chlorination or ozonation for disinfecting (required for all wells) • Ion Exchange for nitrates and other contaminants • Activated Carbon	• Reverse osmosis
Blending	• If multiple wells in proximity have varying levels of constituents, blending could occur to dilute contaminants to legal levels prior to distribution	
Blending	• If multiple wells in proximity have varying levels of constituents, blending could occur to dilute contaminants to legal levels prior to distribution	
Existing Wells at Risk of Contamination by Project Operations		
Treatment Option	First Priority Method	Secondary Priority Method
Careful Management	• Participate in ongoing conjunctive use management of the Basin so Project is a benefit to Basin health for a safe drinking water supply and for the ecological health of the watershed	• choose alternative production and/or spreading location(s) • produce or spread at a different time of year • install barrier wells
Blending	• If multiple wells in proximity have varying levels of constituents, blending could occur to dilute contaminants to legal levels prior to distribution	
Alternative use of contaminated water	• Could be effective in areas where non-potable system or other non-potable use exists if affected well operator is provided with drinking water quality replacement water from another source	

[1] Other than disinfecting, all other treatment approaches are dependent on the contaminants that need to be removed.

- ~~*Appropriate Use*. Contaminated water could be utilized for purposes that would allow or require lower water quality standards.~~

- ~~*Blend*. Water that has poor quality can be blended and diluted until water quality standards are achieved.~~
- ~~*Move (Avoid)*. Choose another production and/or spreading area.~~
- ~~*Careful Management*. Operate wells in a manner that will prevent or delay contamination. This may include installation of barrier wells or avoidance of strategies that would result in acceleration of the movement of contaminated water towards existing wells.~~

- ~~*Wellhead Treatment*. Wellhead treatment can be utilized to bring water to acceptable water quality levels.~~

Comment 4:

The Report also states ground water quality will improve in the San Bernardino area as a result of increased pumping. However, there is little mention of migration of chemicals such as DBCP, except to say DBCP will not be added by the project. Additionally there is no mention of 1,2,3 TCP at all. In fact, Redlands has extensively sampled for and studied these chemicals in the basin. Because of the known location of these chemicals and the proposed location of your project wells in Redlands, there is concern these chemicals could be pulled towards Redlands' 38 and 39 wells. Further study is needed to determine to what extent mitigation measures are necessary should this occur, and should be included as part of your Report.

Response to Comment 4:

In this comment, concern is expressed that operation of the project would cause exiting groundwater contaminants such as 1,2-dibromo-3-chloropropane (DBCP) and 1,2,3-Trichloropropane (TCP) to migrate down-gradient and eventually be captured by Redlands-owned Wells 38 and 39 which are located approximately 1 mile south of the I-10 Freeway west of Alabama Street. "By the nature of the project, no additional sources of contaminants such as TCE, PCE, DBCP and nitrates (NO3) will be added by the RCF project." (Draft SEIR/EIS, p. 4.7-11) Both DBCP and TCP are associated with former agricultural activities that occurred in the Basin and are not associated with the Crafton-Redlands Plume. Since DBCP and TCP are part of the primary compounds TCE and Perchlorate, it is reasonable to assume that both DBCP and TCP will dissipate in a similar manner as the primary compounds (i.e., Trichloroethene [TCE] and Perchlorate) associated with the Crafton-Redlands Plume which was evaluated in the SEIR/EIS. Therefore, results from the groundwater modeling performed for the Draft SEIR/EIS were used to determine if the project would impact Well 38 and/or Well 39 with DBCP and/or TCP. The Draft SEIR/EIS evaluated the project's potential impacts to the pollution plumes within the Basin with respect to PCE, TCE and Perchlorate. This analysis was presented in GEOSCIENCE's 2009 study, Appendix F of this SEIR/EIS, and summarized on page 4.7-24 of the Draft SEIR/EIS.

In order to evaluate the City of Redland's concern for Wells 38 and/or 39, WMWD retained GEOSCIENCE again to provide professional analysis. GEOSCIENCE downloaded and compiled historic water quality data collected from water supply wells in the Redlands area.[16] The data was then compiled

[16] State Water Resources Control Board's GeoTracker web-based database (http://geotracker.swrcb.ca.gov/), and California Department of Public Health Drinking Water Program database (EDT Library and Water Quality Analyses Data and Download Page http://www.cdph.ca.gov/certlic/drinkingwater/Pages/EDTlibrary.aspx)

and analyzed for reported detectable concentrations of DBCP and TCP, which included wells owned by the City of Redlands. Time history concentration plots were generated for all wells and detectable concentration(s) of either contaminant. Evaluation of the available water quality data determined that DBCP has been detected above the maximum contaminant level (MCL) of 0.2 micrograms per liter (µg/L) in City-owned wells since at least 2000, and has continued through 2010. Figure 1, below, shows the location of the wells with detected DBCP relative to the Crafton-Redlands Perchlorate (6 µg/L)[17] Plume footprint reported by Tetra Tech[18] and the five proposed Riverside-Corona Feeder project extraction wells. As shown on Figure 1, the highest reported DBCP concentrations occur in Agate 1 and Well 41. Additionally, TCP has been reportedly detected (since 2009) in Well 10 (0.010 µg/L) and Well 13 (0.008 µg/L). At this time, there is not an MCL for TCP; however, the California Department of Public Health Services (CDPH) has established a notification level (NL) of 0.005 µg/L for TCP. Plots showing historic TCP concentration in Wells 10, 13 and 38 are provided on Figure 1.

Modeling results (Appendix F of the Draft SEIR/EIS, GEOSCIENCE 2009, Figures 40 through 47) indicate that the Crafton-Redlands Plume footprints for both TCE and Perchlorate would dissipate slightly faster under the Project conditions as compared to the Baseline Run (i.e., No Project). This slight decrease in plume footprint is a result of Project-related groundwater recharge and extraction that would accelerate groundwater movement from the recharge areas (i.e., forebay) towards the Redlands area as described in the Draft SEIR/EIS, page 4.7-24:

". . . the results for the TCE transport model show no change in the Norton and Redland-Crafton TCE plume area for all the RCF Scenarios as compared to plume area under Baseline Run (No Project) conditions. By the end of the predictive run (2032), the overall initial area of the TCE plume (approximately 2,030 acres) is reduced to approximately 260 acres for [the No Project and] all of the RCF Scenarios. (2009 Geoscience, Figures 40 through 43)

The modeling results show that the perchlorate plume dissipates slightly faster for RCF Scenarios as compared to the Baseline Run (No Project) as a result of increased extraction from the proposed RCF well field. Under Baseline Run (No Project) conditions, the overall initial area of the perchlorate plume (approximately 7,820 acres) is reduced to approximately 480 acres by the end of the predictive run (2032). By the end of the predictive run (2032), the perchlorate plume area would be 470 acres, 460 acres, and 450 acres for the RCF Scenarios 1 through 3, respectively. (2009 Geoscience, Figures 44 through 47)"

The recharge of high quality SWP water will essentially dilute the existing (i.e., ambient) groundwater, improving the water quality in the Basin over time. With or without the Project, the TCE and PCE plumes areas will be substantially reduced over time. Therefore, based on current reported concentrations in the eastern and central areas of Redlands, movement of either DBCP or TCP westward towards Redlands Well 38 and/or Well 39 is not anticipated to result in significant concentrations.

[17] Current MCL for Perchlorate.

[18] Tetra Tech, summary of Results, 2008 Comprehensive Groundwater Sampling Event, Crafton-Redlands Plume Project, dated January 12, 2009. Prepared for Lockheed Martin Corporation Shared Services.

Comment 5:

Also a concern is the impact to the TDS level in the Redlands area. Redlands has been providing sewer service to its customers since 1932. As part of the city's operating permit for its wastewater treatment plant ("WWTP"), the Regional Water Quality Board ("Regional Board") has established a TDS discharge limit of 465 mg/l. In your Report on page 4.7-3 it states the water quality in the basin near the eastern mountains, the area near Redlands, has a TDS level below 200 mg/l. The Report also states on pages 4.7-5 and 4.7-22 the TDS level in SWP water ranges from 225 mg/l to 325 mg/l, and has an average level of 250 mg/l.

Currently, Redlands discharges water with a TDS level of approximately 440 mg/l. The Regional Board's established limit is only 25 mg/l above the Redlands's current discharges. As explained in your Report, as part of the project, when Western exports water from the Bunker Hill basin, Western will recharge using SWP water to meet its replenishment obligation. This process could result in a higher TDS in the basin. The Report identified the TDS level in SWP water is higher than the water being exported from the Redlands area.

If the result of the project, exporting tens of thousands of acre feet of low TDS water from the Redlands area, is higher TDS in the basin and this leads to Redlands exceeding its Regional Board TDS discharge limit, how will Western mitigate impacts to Redlands? And, at what point will Western take ownership if TDS levels increase in the basin and prevent Redlands from exceeding its discharge limit? These questions must be answered through a scientific study before the project can continue.

I look forward to hearing from you and I am available to discuss these and other issues you may have.

Response to Comment 5:

This comment identifies the City's concern that the Project's recharge of SWP water would eventually degrade the total dissolved solids (TDS) concentration of ambient groundwater, possibly leading to the city of Redlands exceeding its Regional Board TDS discharge limit. Groundwater used for drinking water is one component of the ultimate effluent that reaches the treatment plant, but has been incrementally used for residential and commercial purposes before reaching the plant. As analyzed below, the Project is not projected to increase the TDS levels in groundwater wells in Redlands.

The comment references page 4.7-3 of the Draft SEIR/EIS which states that, "TDS levels throughout the San Bernardino Groundwater basin range from below 200 mg/l near the eastern mountains and Lytle Creek areas to over 600 mg/l in the Colton area." This is a very broad characterization of the Basin area and is not intended to be used as a measure of the existing TDS levels in any specific location, such as the city of Redlands. Table 4.7-D of the Draft SEIR/EIS lists the existing TDS conditions in 2007 for four city of Redlands wells (Well 32, Orange Street Well, Agate 2 Well and Airport Well 2) which were all 280 mg/l.

The potential impact from the Project on TDS concentrations in the Basin was evaluated using the Refined Basin Solute Transport Model (RBSTM) and results were reported in Section 4.7 of the Draft SEIR/EIS beginning on page 4.7-21 and in Appendix F. The evaluation included four (4) predictive model runs to evaluate water quality changes for a Baseline Run (No Project) and three (3) Project conjunctive use scenarios (Scenarios 1 through 3). The sources for TDS concentrations that were input into the model included:

- Direct infiltration from precipitation
- Recharge from local runoff generated by precipitation
- Artificial recharge, Return flow from groundwater pumping
- Recharge from mountain front runoff
- Underflow recharge
- Streamflow

Description of the assumptions used are provided in Section 3.2 of the *Groundwater Modeling of TDS and Nitrate-Nitrogen Concentrations – Riverside-Corona Feeder Project Conjunctive Use Scenarios* (GEOSCIENCE 2010a), in Appendix F of the Draft SEIR/EIS. State Water Project water is one of three components (Santa Ana River water and recycled water being the other two) used to artificially recharge the Basin; the only component to be used for recharge under this Project. The TDS concentration for SWP water was assumed to be equal to or exceed 255 milligrams per liter (mg/L) 50 percent of the time during the simulation period (see Figure 4 in the referenced report). Initial concentrations for TDS in the Basin were based on the 1987–2006 ambient concentrations calculated by Wildermuth Environmental, Inc. in 2008.[19]

Model-predicted TDS concentrations for Scenarios 1 through 3 were found to be similar to those for the Baseline Run (No Project).[20] Plots of TDS concentration over time in the City of Redland's Well 32, Orange Street Well, Agate 2 Well and Airport Well 2 are shown on Figure 2 below. These concentration plots show the temporal variations in TDS concentrations due to hydrologic conditions, artificial recharge and groundwater pumping assumed under No Project and Project Scenarios 1 through 3. More importantly, Figure 2, along with Table 4 3 Of GEOSCIENCE 2010a (Draft SEIR/EIS Table 4.7-D), indicate that the Project will not impact the City's wells with higher TDS concentrations. In general, any future increases in TDS concentration in the Redlands area are related to changes that are predicted to occur with or without the Project such as agricultural use, residential irrigation, chemical processing, etc. Since the Project will not increase TDS concentrations in Redland's groundwater wells, the Project will not result in increased concentrations of TDS in treatment plan effluent.

[19] Wildermuth Environmental, Inc., *Recomputation of ambient Water Quality in the Santa Ana Watershed for the Period 1987 to 2006*, 2008. Prepared for Santa Ana Watershed Project Authority.
[20] Figures 11 through 14 from *Groundwater Modeling of TDS and Nitrate-Nitrogen concentrations – Riverside-Corona Feeder Project Conjunctive Use Scenarios* (GEOSCIENCE 2010a).

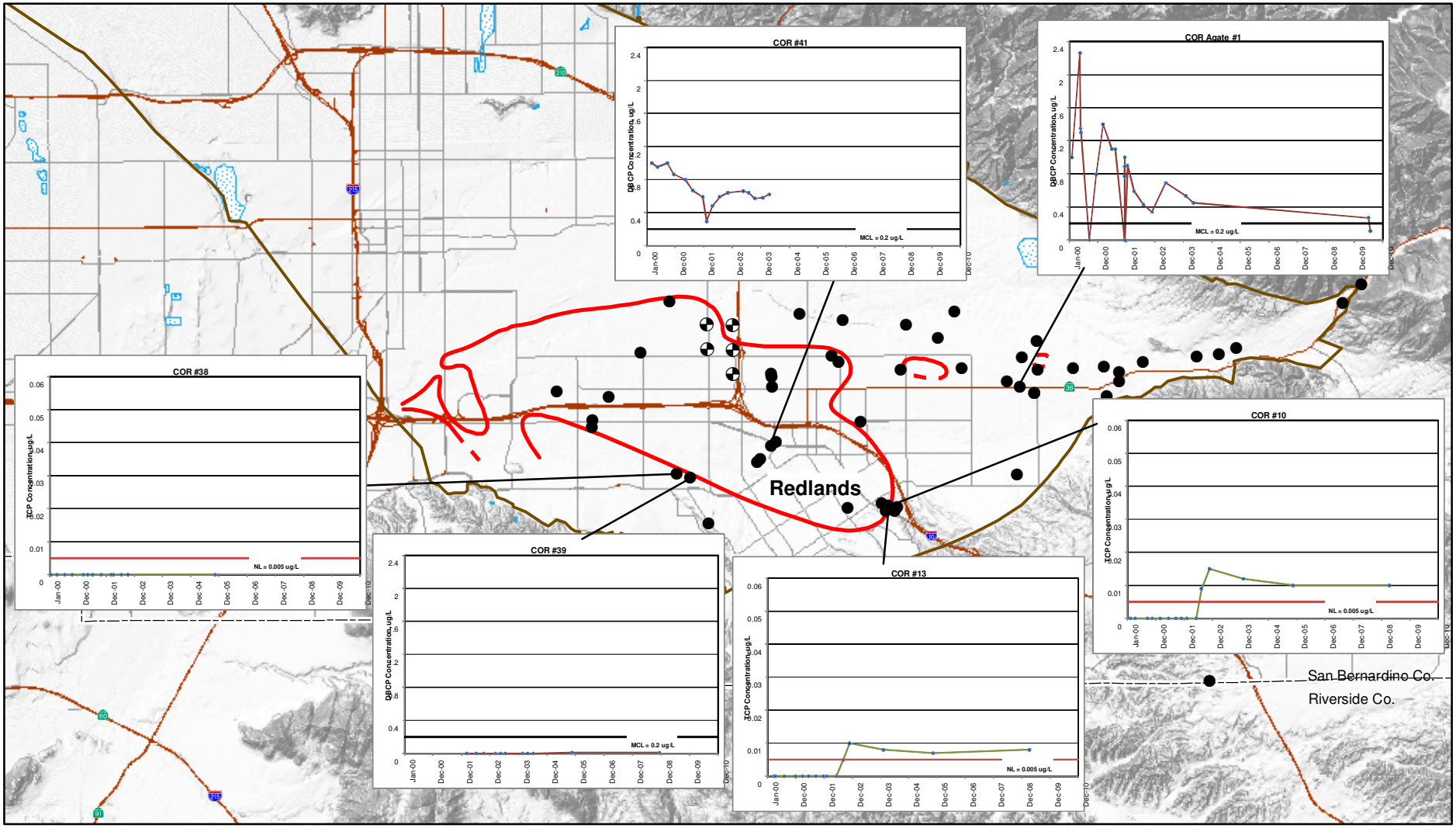

NORTH

0 6,000 12,000 Feet

Bunker Hill Basin Boundary

Santa Ana River Recharge Basin

Perchlorate Plume (Source: Tetra Tech, 2011)

Proposed RCF Project Well

City of Redlands Well

DBCP AND TCP IN THE REDLANDS AREA

15-Aug-11

Map Projection: State Plane 1983, Zone V.

© 2011, GEOSCIENCE Support Services, Inc. All rights reserved.

GIS_proj/wmwd_riv-corona_feeder_conj_use_scenarios_10-09/1_8x11_Fig_1_8-11.mxd

GEOSCIENCE

GEOSCIENCE Support Services, Inc.
P.O. Box 220, Claremont, CA 91711
Tel: (909) 451-6650 Fax: (909) 451-6638
www.gssiwater.com

DRAFT

Figure 1

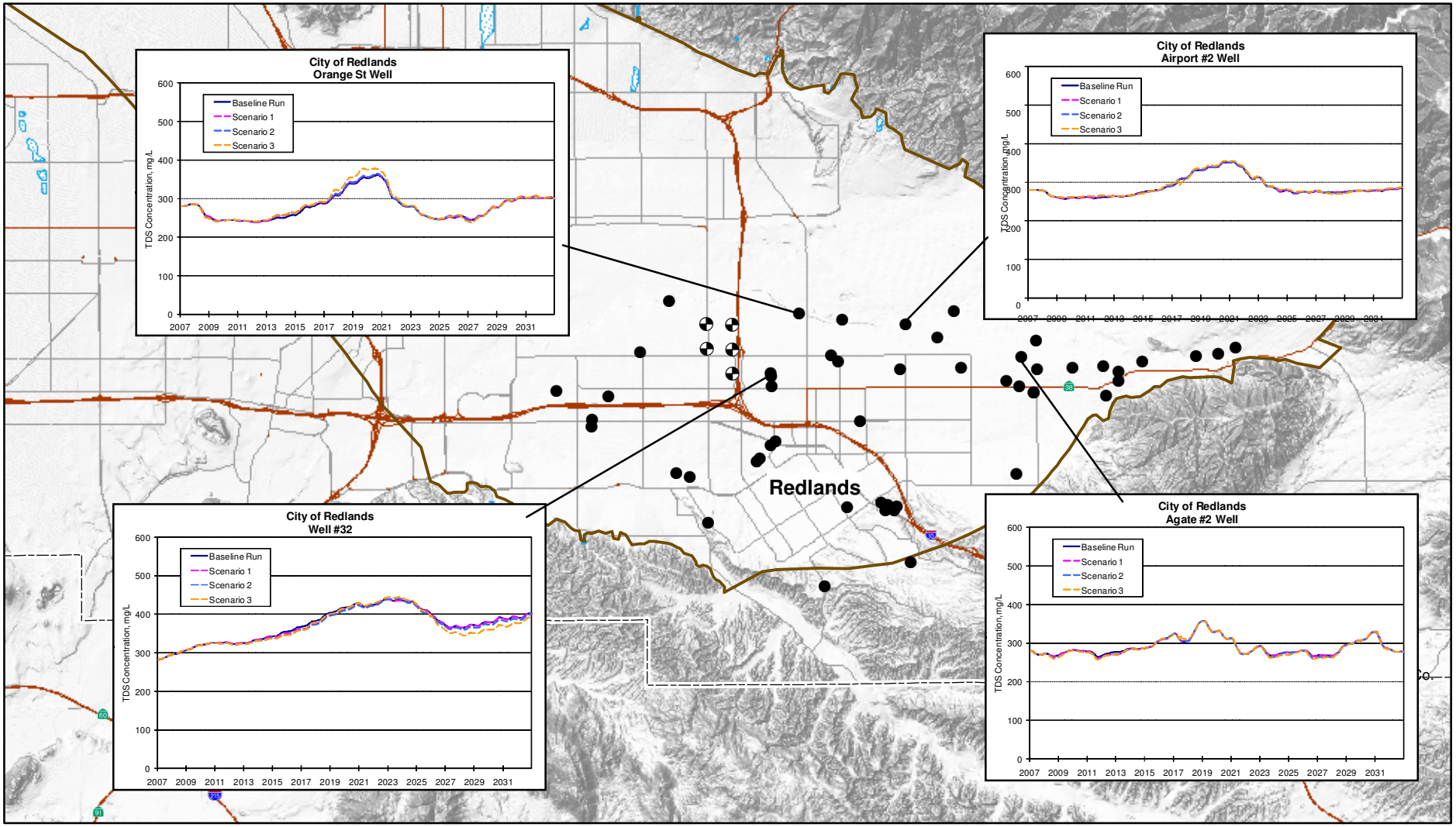

NORTH

0 6,000 12,000 Feet

Bunker Hill Basin Boundary

Santa Ana River Recharge Basin

Proposed RCF Project Well

City of Redlands Well

MODEL PREDICTED TDS CONCENTRATIONS IN THE REDLANDS AREA

15-Aug-11

Map Projection: State Plane 1983, Zone V.

© 2011, GEOSCIENCE Support Services, Inc. All rights reserved.

GIS_proj/wmwd_riv-corona_feeder_conj_use_scenarios_10-09/1_8x11_Fig_2_8-11.mxd

GEOSCIENCE

GEOSCIENCE Support Services, Inc.
P.O. Box 220, Claremont, CA 91711
Tel: (909) 451-6650 Fax: (909) 451-6638
www.gssiwater.com

DRAFT

Figure 2

Response to the
City of San Bernardino Planning Division
Letter Dated February 16, 2011

Comment 1:

Thank you for the opportunity to comment on the Supplemental EIR/EIS. The traffic safety mitigation measures address the concerns raised by our department in response to the Notice of Preparation in 2008. This project will impact Orange Show Road, a major arterial in the City of San Bernardino, and the plan to bore under I-215 will require a significant staging/work area. Based on the planned commencement and phasing of construction, work within the City of San Bernardino will begin in approximately 2023. Please keep the city Public Works and Community Development Departments apprised of the progress of the project and contact the City well in advance of this phase of construction, to coordinate with improvement and maintenance plans for Orange Show Road and Auto Plaza Drive, and to obtain approval of the traffic safety plan, encroachment permits, and potentially a temporary use permit for the boring project.

The City of San Bernardino Municipal Water Department will respond separately to address issues of water storage and withdrawal from the San Bernardino Basin Area. If you have any questions, please contact me at (909) 384-5057 ext. 3330.

Response to Comment 1:

WMWD will work closely with all local agencies through which this Project traverses to ensure that, at the time of construction, no conflicts in construction activities and/or traffic congestion occur.

As stated on page 4.12-40 of the Draft SEIR/EIS, mitigation measure **MM Trans 13** requires encroachment permits from applicable governing agencies prior to commencement of any construction of the pipeline within their jurisdictional rights-of-way. Standard information included in these permits will also address issues associated with short-term traffic impacts. These governing agencies include, but may not be limited to, City of San Bernardino, Caltrans, City of Colton, City of Jurupa Valley, County of San Bernardino, City of Rialto, City of Riverside, City of Redlands, the Gage Canal Company, and City of Corona.

Mitigation measure **MM Air 1** (Draft SEIR/EIS, p. 4.2-65) requires a traffic control plan to keep construction and other traffic moving as freely as possible during construction. In addition, **MM Trans 2** and **2a** (Draft SEIR/EIS, p. 4.12-37-38) require Traffic Control and Safety Plans which will minimize traffic interference due to construction.

Therefore, encroachment permits and approval of traffic safety plans will be obtained from the City of San Bernardino. No new significant impacts or information not previously addressed in the SEIR/EIS was identified by this comment. No further analysis is required.

Response to the
City of San Bernardino Municipal Water Department
Letter Dated March 1, 2011

Comment 1:

The San Bernardino Municipal Water Department (Department) has reviewed the Draft Supplemental Environmental Impact Report (SEIR) for the proposed realignment of the Riverside-Corona Feeder. The Department previously submitted correspondence on April 25, 2003 in response to the Notice of Preparation of a Draft Program EIR for the project. In its 2003 correspondence, the Department identified specific concerns regarding hydrologic impacts, basin management, project impact on the Newmark Groundwater Remediation project, and others. Since submission of its 2003 comments, significant developments have occurred within the Upper Santa Ana River Watershed and Bunker Hill Basin Area. These developments include the 2007 adoption of the Upper Santa Ana River Integrated Regional Water Management Plan (IRWMP), and the 2010 Institutional Controls Groundwater Management Program Agreement (ICGMP) between the Department and other agencies regarding the Department's Newmark Groundwater Contamination Remediation project.

In light of the basin management provisions and policies established by these documents, the Department believes that the SEIR has addressed most of the Department's comments as provided in its 2003 comment letter. However, the Department does have several specific concerns regarding the project and SEIR, as follows:

Response to Comment 1:

Western Municipal Water District ("WMWD") and the U.S. Bureau of Reclamation ("BOR") appreciate the City's comments and are pleased that most of San Bernardino's previous concerns have been addressed satisfactorily. The following responses address the few remaining concerns the City has identified.

Comment 2:

- **Conjunctive Use of San Bernardino Basin Area** – The SEIR outlines the institutional framework established by the 1969 Western Judgment (Riverside County Superior Court Case No. 78426), including the role and obligations of the Watermaster. While the

  Department is supportive of the regional basin management process established in the IRWMP, it remains concerned about the absence of a conjunctive use policy for managing imported and exported supplies, and lack of rules for storage of such supplies in the Basin. The Watermaster is currently engaged in a comprehensive review of its management procedures with stakeholder entities; and the SEIR should address this process and assure compliance with any subsequent management changes that occur as a result of the Watermaster process review.

Response to Comment 2:

WMWD is committed to work with the stakeholders in the Basin by being an active participant in conjunctive use of the Basin as evidenced by this Project. As the General Manager of WMWD serves as Watermaster with San Bernardino Valley Municipal Water District General Manager, WMWD is keenly aware of and will abide by policies and procedures that come out of the Watermaster review process. In addition, mitigation measures **MM GWL 2** and **MM GWQ 2** require annual monitoring and reporting to avoid and remedy all potential impacts prior to them becoming significant. To address concerns raised in this letter and letters from the City of Redlands and the U.S. Environmental Protection Agency ("EPA"), **MM GWQ 2** has been revised to include more specificity regarding the trigger(s) for treatment to be implemented and which entity will take responsibility for any cleanup efforts directly attributable to this Project. The mitigation measure will be revised and included in the Final SEIR/EIS as follows:

MM GWQ 2 (Revised): To assure that ongoing management of the RCF is coordinated with management of the Basin Area as a whole, monitoring and adaptive management shall be employed.

a) The RCF operations management plan will be developed and tested using the groundwater modeling employed by the Basin Area TAC (or its successor or assignee) on an annual basis. Existing groundwater flow and groundwater quality model(s) shall be used to predict the effects of project operations on groundwater quality. The results of the modeling shall be presented to the BTAC. If the results indicate that the location of pollution plumes will be shifted by project operations such that additional existing 'clean' wells could become contaminated, WMWD shall modify planned operations to avoid the result or otherwise address the modeled situation to the satisfaction of the BTAC. Examples of operational modifications that could be used are provided in the following table.

b) When a new well is drilled, indicator wells in the vicinity that could be affected by Project operation, will be selected to become part of the annual operations management plan. If water quality testing at any indicator wells (which are already tested regularly) suggests that the replenishment and pumping regime of the proposed project operation is causing drinking water quality in a given well to become newly contaminated or to worsen due to the Project~~, exceed state drinking water standards~~, production and/or spreading in the area(s) contributing to the contamination shall cease until a remedy is identified and implemented. ~~adverse affects associated with the project no longer occur.~~ Such remedies may include but not be limited to the following:

Contamination Remedy Examples and Method Priorities

New Wells Drilled for Project Operations		
Treatment Option	First Priority Methods	Secondary Priority Methods
Avoidance	• Move or Avoid Production in a Contaminated Location	• Wellhead treatment
Wellhead Treatment[1]	• Chlorination or ozonation for disinfecting (required for all wells) • Ion Exchange for nitrates and other contaminants • Activated Carbon	• Reverse osmosis
Blending	• If multiple wells in proximity have varying levels of constituents, blending could occur to dilute contaminants to legal levels prior to distribution.	
Blending	• If multiple wells in proximity have varying levels of constituents, blending could occur to dilute contaminants to legal levels prior to distribution.	
Existing Wells at Risk of Contamination by Project Operations		
Treatment Option	First Priority Method	Secondary Priority Method
Careful Management	• Participate in ongoing conjunctive use management of the Basin so Project is a benefit to Basin health for a safe drinking water supply and for the ecological health of the watershed.	• Choose alternative production and/or spreading location(s) • Produce or spread at a different time of year • Install barrier wells
Blending	• If multiple wells in proximity have varying levels of constituents, blending could occur to dilute contaminants to legal levels prior to distribution.	
Alternative use of contaminated water	• Could be effective in areas where non-potable system or other non-potable use exists if affected well operator is provided with drinking water quality replacement water from another source.	

[1] Other than disinfecting, all other treatment approaches are dependent on the contaminants that need to be removed.

- ~~*Appropriate Use*. Contaminated water could be utilized for purposes that would allow or require lower water quality standards.~~
- ~~*Blend*. Water that has poor quality can be blended and diluted until water quality standards are achieved.~~
- ~~*Move (Avoid)*. Choose another production and/or spreading area.~~
- ~~*Careful Management*. Operate wells in a manner that will prevent or delay contamination. This may include installation of barrier wells or avoidance of strategies that would result in acceleration of the movement of contaminated water towards existing wells.~~

- ~~*Wellhead Treatment*. Wellhead treatment can be utilized to bring water to acceptable water quality levels.~~

No new significant impacts or information not previously addressed in the SEIR/EIS was identified by this comment. No further analysis is required.

Comment 3:

- **Groundwater Quality** – The SEIR identifies the need for additional analyses and modeling to assure that project will not result in significant adverse impacts to existing groundwater wells. In the likely event that wellhead treatment is required as a result of project implementation, the SEIR should include a mitigation measure to assign responsibility for developing and operating such treatment to Western Municipal Water District. In addition, reference should be made to the cooperative agreement between the San Bernardino Valley Municipal Water District (Valley District) and the Regional Water Quality Control Board.

Response to Comment 3:

The Draft SEIR/EIS includes mitigation to address potential contamination to existing wells (**MM GWQ 2**). Based on comments received from the Cities of San Bernardino, Redlands and the EPA, **MM GWQ 2** has been modified (as shown above in **Response to Comment 2**) to include more specificity regarding the trigger(s) for treatment to be implemented and which entity will take responsibility for any cleanup efforts directly attributable to this Project.

Replenishment of the Basin with SWP water has been occurring since 1972.[21] The past and present effect of that activity plays into the California Regional Water Quality Control Board, Santa Ana Region 8's ("RWQCB's"), water quality objectives (which are presented in Table 4.7-B of the Draft SEIR/EIS). In 2006, RWQCB asked all the water agencies that recharge SWP water within the Santa Ana River aquifer system to provide information regarding SWP recharge and extraction in the basins. A cooperative agreement between the RWQCB and these seven agencies now requires all agencies up and down the Santa Ana River who replenish with SWP water, to model and report systematically to RWQCB. Currently within the San Bernardino Basin, San Bernardino Valley Municipal Water District (SVMWD) is the agency that receives and spreads SWP water and thus, is a party to this agreement with respect to the Basin. WMWD is also a party to the agreement with respect to the Riverside Basin. The agreement spells out sampling methods and timing, responsible party(ies), and reporting requirements and timing. The reporting years required start with agencies at the uppermost reaches of the SAR, such as San Gorgonio Pass Water Agency which is due to report to RWQCB in 2012. The results of its report are then used in the modeling/reporting performed by SBVMWD which is due to RWQCB in 2013, and so on, down the river basin. Thus, the effects of recharge and extraction of SWP water in the basins is being monitored and evaluated on an ongoing basis by the state.

No new significant impacts or information not previously addressed in the SEIR/EIS was identified by this comment. No further analysis is required.

[21] Phone communication between Cathy Perring of Webb Associates and M. Samuel Fuller, Chief Engineer, San Bernardino Municipal Water District, 7/15/2011.

Comment 4:

- **Conflicts with Existing Facilities** – The SEIR notes that project construction will occur within existing public rights of way in the City of San Bernardino. Conflicts with existing pipelines owned by the Department are anticipated; however, engineering design is not available to establish potential conflict locations. The SEIR should include a mitigation measure to provide for relocation or modification of existing Department facilities and for coordination of project design with the Department where conflicts are identified.

Response to Comment 4:

The SEIR/EIS identifies that WMWD will be required to acquire encroachment permits from the City of San Bernardino to construct the pipeline in road rights-of-way and/or grading permits wherever construction occurs outside of the road right-of-way. (Draft SEIR/EIS, p. 2.0-10) The following text shall be added to the Final SEIR/EIS (shown as underlined) to clarify that coordination with the City Water Department is also required. In addition, **MM Trans 3**, which requires coordination with affected local jurisdictions prior to each individual phase of construction within the Project, will also be modified to clarify that jurisdictions and/or agencies within jurisdictions which own underground facilities, must also be consulted, which is typical during the final design process.

Page 2.0-10 to 2.0-11:

- **Counties of Riverside and San Bernardino, and Cities of San Bernardino, Colton, Corona and Rialto**

  a) Encroachment permits will be required to construct the pipeline in roads/rights-of-way. Public Works, Municipal Water Departments and other agencies or departments within the above listed local governments will require coordination and may require encroachment permits for any Project facilities encroaching upon facilities or facilities easements owned by the agency.

  b) Grading permits will be required by the local jurisdictions wherever construction occurs outside of the road right-of-way.

  c) Compliance with all local policies related to cultural resources and tree preservation policies.

MM Trans 3: Prior to the commencement of each individual construction project, WMWD and its contractor shall consult with the affected local jurisdiction(s) in order to coordinate project construction with applicable Capital Improvement Projects, underground facilities and/or other known potential items needing to be taken into account during final design, plan specifications, and/or construction so that issues can be avoided and/or remedies included in the specifications that meet with each jurisdiction's requirements.

No new significant impacts or information not previously addressed in the SEIR/EIS was identified by this comment. No further analysis is required.

Comment 5:

- **Raw Water versus Potable Water Standards** – The Department maintains several interties with the Valley District's 78" Baseline Feeder South Pipeline. This inter-agency connection provides potable water from the Department to Valley District and is subject to permit requirements for potable water supply issued to the Department by the State of California Department of Public Health (DPH). The SEIR for the project does not address treatment requirements for raw water that may enter Department's system through the Baseline Feeder interties as a result of the construction of additional groundwater wells. Removal of the existing interties may be required to separate the domestic and raw water systems, or another method established to assure compliance with the Department's DPH permit standards.

Response to Comment 5:

The Riverside-Corona Feeder Project is designed to transport potable water. Water produced from any new Project well or from an existing well that is transported and/or stored in the Project facilities, must meet potable water standards. Based on this comment by the City and some confusion on the part of other commenters, the Annotated Draft SEIR/EIS which is bound with the Responses to Comments to form the Final SEIR/EIS, will be edited as follows:

Various paragraphs on pages 1.0-1 and 1.0-2:

The project is proposed to store excess imported water, when it is available, to increase firm water supplies, to improve water quality, and to reduce water costs. The project proposes to manage the groundwater levels through the construction of groundwater wells in the San Bernardino Basin Area and pumps to deliver the treated groundwater supply to water users. The project will also include a new potable water pipeline system to connect to existing water facilities in ~~serve~~ portions of San Bernardino and Riverside counties. This system of storage, extraction, treatment and distribution will improve the reliability of WMWD's water supply through the managed storage and distribution of excess imported water and reduce possible water shortages during dry years through reduced dependence on imported water during dry year conditions. To achieve this purpose, the RCF project replenishes excess State Water Project (SWP) water supplied by Metropolitan Water District of Southern California ("MWD") into the San Bernardino Groundwater Basin, and extracts, treats, and moves water throughout the region by way of interconnections between local groundwater basins. . . .

The realignment evaluated by this SEIR also allows WMWD to address the reduced potential for California State Water Project water availability for groundwater replenishment purposes and includes connections to the Jurupa Community Services District's pipeline facilities, the San Bernardino Valley Municipal Water District's Inland and Central Feeders, and other existing WMWD facilities. These connections will facilitate the transportation of potable water from one water agency to another and one groundwater basin to another through the development of multiple interconnected pipelines within the project area. The facilities may also be used to convey local water supplies, once treated, pursuant to rights held by . . .

Various paragraphs on pages 2.0-3, 2.0-4, and 2.0-5:

The purpose of the RCF is to store excess imported water, when it is available, to increase firm water supplies, to improve water quality, and to reduce water costs. The project proposes to manage the

groundwater levels through the construction of groundwater wells and pumps to deliver the treated groundwater supply to water users. The project will also include a new potable water pipeline system to connect to existing water facilities in ~~serve~~ portions of San Bernardino and Riverside counties. . . .

RCF infrastructure will allow WMWD to purchase State Water Project water from the Metropolitan Water District of Southern California ("MWD") and store that water in the San Bernardino Groundwater Basin Area, and to extract, treat and distribute the water from the Basin Area when it is needed. . . .

The facilities may also be used to convey local potable water supplies pursuant to rights held by the City of Riverside and the Elsinore Valley Municipal Water District and to deliver treated imported water to wholesale customers. If appropriate agreements can be reached, additional native water may at times also be available. The facilities may also be used to obtain and convey native water, once treated, pursuant to rights held by other agencies, such as the City of Riverside, Jurupa Community Services District, Rubidoux Community Services District, the Chino Basin Desalter Authority, San Bernardino Valley Municipal Water District, and Elsinore Valley Municipal Water District. This project will make WMWD less dependent on the direct delivery of water from the MWD.

Page 3.0-23

The Central Feeder Connection consists of approximately 6,350 linear feet of an up to 54-inch diameter pipeline located in the San Bernardino Avenue right-of-way between Alabama Street in unincorporated San Bernardino County and Webster Street in the city of Redlands. (Figure 3.0-8, Central Feeder Connection) Adjacent to the Central Feeder Pipeline are up to five new proposed 350-HP x 2,200-gallons per-minute (GPM) groundwater production wells, including treatment facilities to meet drinking water standards, within the well field identified on Figure 1.0-1 (exact locations not determined) which will be connected into the San Bernardino Valley Municipal Water District's Central Feeder Pipeline; thereby providing additional means for transporting San Bernardino Groundwater Basin water through regional pipeline facilities that are connected to the Riverside-Corona Feeder project. These five wells are included within the 20 total wells associated with the RCF.

No new significant impacts or information not previously addressed in the SEIR/EIS was identified by this comment. No further analysis is required.

Response to the
City of Fontana
Letter Dated February 15, 2011

Comment 1:

On January 19, 2011, the City of Fontana Planning Division received the Notice of Completion & Availability of a Draft Supplemental Environmental Impact Report and Draft Environmental Impact Statement (SEIR/EIS) for the Riverside-Corona Feeder Realignment project. The project consists of building approximately 30 miles of a large-capacity water pipeline ranging in diameter up to 78 inches, up to 20 new and existing wells, and appurtenant facilities associated with aquifer storage and recovery. The project location extends from the City of San Bernardino, San Bernardino County on the northeast, to the City of Corona, Riverside County on the southwest. The public review period began on January 20, 2011, through March 8, 2011. At this time, the City has no comments or concerns. Thank you for allowing the City of Fontana to participate in the public review process.

Response to Comment 1:

Comment noted. No further response is required.

Response to the
Metropolitan Water District of Southern California
Letter Dated March 22, 2011

Comment 1:

The Metropolitan Water District of Southern California (Metropolitan) has reviewed the Notice of Availability of a Draft Environmental Impact Report/Environmental Impact Statement for the Riverside-Corona Feeder Project (Draft EIR/EIS). Western Municipal Water District (WMWD) is acting as the Lead Agency under the California Environmental Quality Act for this project. The proposed project and alternatives for the Riverside-Corona Feeder pipelines and connections to regional facilities will extend across multiple jurisdictions, including unincorporated portions of San Bernardino and Riverside Counties and the cities of San Bernardino, Colton, Corona, Grand Terrace, Redlands, Rialto, and Riverside. The proposed infrastructure will allow WMWD to store State Water Project water purchased from Metropolitan in the existing San Bernardino Groundwater Basin, along with local Santa Ana River flows and groundwater from existing Chino Basin desalter facilities when supplies are available. The stored water would then be extracted by installing up to 20 groundwater wells and conveyed through a new 28-mile long pipeline ranging up to 78 inches in diameter and through new connections to existing pipelines for delivery to communities in WMWD's service area. This letter contains Metropolitan's comments on the proposed project as a potentially affected public agency.

Response to Comment 1:

For clarification, the Project realignment that is analyzed as the Preferred Alternative in this SEIR/EIS, includes pipelines and facilities in both Riverside and San Bernardino counties, and the cities of Redlands, San Bernardino, Colton, Rialto, Jurupa Valley, Corona, and Riverside. Also, to clarify the Project description above, the proposed Project includes storage of State Water Project water purchased from Metropolitan Water District in the San Bernardino Groundwater Basin. The Project analyzed in this SEIR/EIS does not include storage in any groundwater basin of Santa Ana River flows and/or groundwater from the Chino Basin desalter facilities. If such storage programs are proposed now or in the future, the impacts to the basin(s) will require separate environmental review. The Project may extract from up to 20 groundwater wells in the San Bernardino Basin, but many may be existing wells.

Comment 2:

Based on Metropolitan's review of Figure 1 in the Draft EIR/EIS, it appears that the proposed pipelines conveying groundwater from the San Bernardino and Chino groundwater basins will cross Metropolitan's Upper Feeder (steel, diameter ranging in size from 123" to 133") pipeline and right of way at several locations. These crossings appear to occur within the region bounded by Magnolia Avenue to the north, El Sobrante Road to the south, Monroe Street to the east, and La Sierra Avenue to the west. Metropolitan requires that the proposed pipelines conveying untreated groundwater at these crossings incorporate the necessary secondary containment, pipe material, and/or pipe separation to ensure no adverse impacts to the water quality, structural integrity, or operations of Metropolitan's Upper Feeder.

Metropolitan must be allowed to maintain its rights-of-way and requires unobstructed access to its facilities in order to maintain and repair its system. In order to avoid potential conflicts with Metropolitan's facilities and rights-of-way, we require that any design plans for any activity in the area of Metropolitan's pipelines or facilities be submitted for our review and written approval. Approval of the project should be contingent on Metropolitan's approval of design plans for portions of the proposed project that could impact its facilities.

Response to Comment 2:

The Riverside-Corona Feeder Project will not carry untreated groundwater; therefore, it will not be necessary to design the Project to avoid infiltration of untreated water. The structural integrity of both the Project facilities and MWD facilities will be taken into consideration in the design phase of the Project.

The Draft SEIR/EIS recognizes that MWD has facilities and easements within the Project alignment, as indicated in Table 3.0-C, Summary of Major Pipeline Crossings North to South, where three crossings of the MWD Aqueduct are identified.

To ensure that the Project is designed to avoid significant impacts to all MWD facilities, page 2.0-12 of the SEIR/EIS recognizes MWD as a Responsible Agency and states:

- **Metropolitan Water District (MWD)**
    a) Metropolitan Water District will require coordination and may require encroachment permits for any facilities encroaching upon facilities or facility easements owned by MWD.

Therefore, the necessity for the coordination and review of the Project by WMWD has already been considered and addressed in the document. The encroachment permit process will allow MWD to ensure its facilities and unobstructed access are maintained. No further analysis is required.

Comment 3:

Detailed prints of drawings of Metropolitan's pipelines and rights-of-way may be obtained by calling Metropolitan's Substructures Information Line at (213) 217-6564. To assist the applicant in preparing plans that are compatible with Metropolitan's facilities and easements, we have enclosed a copy of the "Guidelines for Developments in the Area of Facilities, Fee Properties, and/or Easement of The Metropolitan Water District of Southern California." Please note that all submitted designs or plans must clearly identify Metropolitan's facilities and rights-of-way.

Please continue to keep Metropolitan informed of ongoing developments. We appreciate the opportunity to provide input to your planning process and we look forward to receiving future documentation on this project. For further assistance, please contact me at (213) 217-6409.

Response to Comment 3:

WMWD appreciates MWD's comments and will coordinate when design and construction begin. No new significant impacts or information not previously addressed in the SEIR/EIS was identified by this comment. No further analysis is required.

Response to the
Airport Land Use Commission, Riverside County
Letter Dated March 3, 2011

Comment 1:

Thank you for providing the Riverside County Airport Land Use Commission (ALUC) with a CD copy of the above-referenced document. The report is well-written and informative, and we did not find any erroneous statements relating to airport land use compatibility. Our review of the project indicates that the project will include facilities within the Airport Influence Areas of Riverside Municipal Airport, Flabob Airport, and March Air Reserve Base. The pump station associated with the Clay Street Connection would be located within the Riverside Municipal Airport Influence Area. The reservoir associated with the Mockingbird Connection would be located within the March Air Reserve Base Airport Influence Area. The Northern Reach (which would be installed underground) would pass through the Flabob Airport Influence Area, as well as the Riverside Municipal Airport Influence Area.

Response to Comment 1:

To clarify the proposed Project location, the Project is not located within the Airport Influence Area for March Air Reserve Base. The County of Riverside General Plan is divided into Area Plans; the March Air Reserve Base Airport Influence Area is shown on Figure 4: Policy Areas of the Lake Matthews/Woodcrest Area Plan. Figure 4 clearly shows that the March Air Reserve Base Airport Influence Area is located to the east of Township 3 South, Range 5 West. The proposed Project facilities in this vicinity are the Mockingbird Connection underground tank/reservoir and pump station. These facilities are proposed to be located on a lot within Tentative Tract Map 34059, which is within the Riverside city limits and within Township 3 South, Range 5 West. Therefore, no Project facilities are located within the March Air Reserve Base Airport Influence Area.

The Northern Reach of the Project traverses the ALUC the Airport Influence Area of the Flabob Airport within Avalon Street, Mission Boulevard, and Limonite Avenue. At this location the Project is entirely underground and within Airport Compatibility Zones D and E. Zones D and E prohibit "hazards to flight" which are defined as objects greater than 70 feet and 100 feet in height, respectively.[22] As the Project is an underground pipeline in this location, the Project, once operational, will have no impact on Flabob Airport. Although it is not anticipated that construction equipment will exceed 70 or 100 feet in height, mitigation measure **MM Haz 11** will be added to the Final SEIR/EIS and Mitigation Monitoring and Reporting Plan to assure that the Project will be in compliance with airport restrictions.

> **MM Haz 11:** To avoid potential impacts resulting from temporary flight hazards within the Flabob Airport Influence Area, no construction equipment shall exceed 70 feet in height within the Northern Reach where it is located in Avalon Street south of the 60 Freeway, Mission Boulevard, and Limonite Street.

A portion of the Project's Central Reach and the Clay Street Connection facilities are located within the Riverside Airport Influence Area within Clay Street, Limonite Avenue, Pedley Road, Van Buren Boulevard, and Jackson and Monroe Streets. In this area, all Project facilities are underground except the Clay Street Connection pump station which includes an approximately 5,000-square foot booster station

[22] Riverside County Airport Land Use Compatibility Plan, Table 2a: Basic Compatibility Criteria, Adopted Oct. 2004.

with pumps, meters, flow control, and disinfection facilities near the intersection of Limonite Avenue and Pedley Road. The booster station will be enclosed within "an approximately 16-foot high block building." (Draft SEIR/EIS, p. 4.1-9) This building is located in Compatibility Zone E where hazards to flight are considered objects taller than 100 feet in height. Since this structure does not meet this height threshold and is an unoccupied structure except for routine maintenance, it will have no impact on Riverside Airport.

The portion of the Project's Central Reach which are located within the Riverside Airport Influence Area traverses Compatibility Zones A, B2, C, D and E. Flight hazards are prohibited in Zones A and B2 if they exceed 35 feet in height; Zone C like Zone D is 70 feet. As the Project is an underground pipeline in this location, the Project, once operational, will have no impact on Riverside Airport, however; during construction, "depending on the elevation at individual construction sites, the distance from Riverside Municipal Airport runways, and the height of construction equipment; future development of portions of the RCF Realignment Project may encroach into this 100-to-1 slope imaginary surface and will require the filing of Form 7460-1 with the FAA." (Draft SEIR/EIS, p. 4.8-23) Mitigation measure **MM Haz 10** addresses this potential temporary impact and requires consultation prior to construction with the manager of the Riverside Municipal Airport to determine if encroachment (i.e., a flight hazard) might result from construction; if it is determined that there will be an encroachment into the 100-to-1 imaginary surface, then WMWD shall file a FAA Form 7460-1, Notice of Proposed Construction or Alteration, and work with the FAA to resolve any adverse effects on aeronautical operations. (Draft SEIR/EIS, p. 4.8-27) These could include such things as, but not limited to:

- The use of construction equipment that is short enough to avoid encroachment into the imaginary surface;
- Alternative construction methods to avoid the use of cranes or other tall equipment; or
- Construction at night when the airport is closed.

MM Haz 10 will be modified in the Final SEIR/EIS to include the above examples of what the FAA could require that would mitigate potential equipment height issues during construction to less than significant. Therefore, with implementation of **MM Haz 10**, potential impacts to airport operations at Riverside Municipal Airport will be reduced to less than significant. No new significant impacts or information not previously addressed in the SEIR/EIS was identified by this comment. No further analysis is required.

Comment 2:

The project extends into unincorporated Riverside County. In 2004, ALUC adopted a new Airport Land Use Compatibility Plan for Flabob Airport. In 2005, a new Airport Land Use Compatibility Plan was adopted for Riverside Municipal Airport. The County of Riverside has not yet amended its Jurupa Area Plan to be consistent with these Compatibility Plans. Until a determination is made by ALUC that the Jurupa Area Plan, as adopted in 2003 and as may have been subsequently amended, is consistent with these Compatibility Plans, projects affecting land within the portion of this Area Plan in Airport Influence Areas are subject to ALUC review.

If no permits from the Riverside County Planning Department will be required for the facilities proposed by this project, ALUC review of this project should be accomplished at the environmental stage. Information associated with project submission can be obtained from our website at www.rcaluc.org.

Response to Comment 2:

Under the heading, *1.5 Types of Actions Reviewed*, on page 2-5, Chapter 2, Countywide Polices, in *the Riverside County Airport Land Use Compatibility Plan Policy Document* (Adopted October 2004):

> *"1.5.2. Other Land Use Actions Subject to ALUC Review*: In addition to the above types of land use actions for which ALUC review is mandatory, other types of land use actions are subject to review under the following circumstances:
>
> (a) Until such time as (1) the Commission finds that a local agency's general plan or specific plan is consistent with the Airport Land Use Compatibility Plan, or (2) the local agency has overruled the Commission's determination of inconsistency, state law provides that the ALUC may require the local agency to refer all actions, regulations, and permits involving land within an airport influence area to the Commission for review (Public Utilities Code Section 21676.5(a)). Only those actions that the ALUC elects not to review are exempt from this requirement. Commission policy is that only the major land use actions listed in Policy 1.5.3 shall be submitted for review.
>
> **1.5.3. Major Land Use Actions:** The scope or character of certain major land use actions, as listed below, is such that their compatibility with airport activity is a potential concern. Even though these actions may be basically consistent with the local general plan or specific plan, sufficient detail may not be known to enable a full airport compatibility evaluation at the time that the general plan or specific plan is reviewed. To enable better assessment of compliance with the compatibility criteria set forth herein, ALUC review of these actions may be warranted. The circumstances under which ALUC review of these actions is to be conducted are indicated in Policy 1.5.2, above.
>
> (a) Actions affecting land uses within any compatibility zone.
>
> (1) Any proposed expansion of the sphere of influence of a city or special district.
> (2) Proposed pre-zoning associated with future annexation of land to a city.
> (3) Proposed development agreements or amendments to such agreements.
> (4) Proposed residential development, including land divisions, consisting of five or more dwelling units or lots.
> (5) Any discretionary development proposal for projects having a building floor area of 20,000 square feet or greater unless only ministerial approval (e.g., a building permit) is required.
> (6) Major capital improvements (e.g., water, sewer, or roads) which would promote urban uses in undeveloped or agricultural areas to the extent that such uses are not reflected in a previously reviewed general plan or specific plan."

The Riverside-Corona Feeder project is discussed as a potential source of domestic water on page PF-9 and included in *Table PF-3, Western Municipal Water District Projected Domestic Water Supply*, in the City of Riverside General Plan 2025, adopted November 2007, and reviewed by the ALUC. "Commission policy is that only the major land use actions listed in Policy 1.5.3 shall be submitted for review" and Section 1.5.3 states that a "major capital improvement," such as the Project, would only be considered a major land use action "to the extent that such uses are not reflected in a previously reviewed general plan." Therefore, since water provided through this Project to the City of Riverside has already been considered in its General Plan, the Project should not need to come before the ALUC.

The Jurupa Area Plan area is now located within the cities of Jurupa Valley and Eastvale and is served by the Jurupa Community Services District (JCSD) as the water provider in the area, JCSD will potentially

have access to RFC water at multiple turn-outs. With the exception of one small (approximately 10 acres) site that is designated as Agriculture on the JAP Land Use Plan (located south of Limonite Avenue and east of Bain Street), no vacant /agricultural land has not been planned for urban uses in the JAP. Thus, Section 1.5.3 (6), above would not apply.

As shown above, although the Project falls within the Jurupa Area Plan (JAP), the County of Riverside will not be the agency that will amend the JAP to be consistent with the Airport Land Use Compatibility Plan; that process will have to be completed by the newly incorporated cities of Eastvale and Jurupa Valley. The Project should not be required to go through ALUC review for the following reasons:

1. According to the *Riverside County Airport Land Use Compatibility Plan Policy Document*, the Project is consistent with 1.5.3 (6), as it is a major capital improvements project which would promote urban uses in undeveloped or agricultural areas; however, such uses were reflected in a previously reviewed general plans; the general plans being the City of Riverside General Plan and JAP of the Riverside County General Plan which will be the General Plan for the Cities of Eastvale and Jurupa Valley until they create and adopt a new plan. Therefore, the Project would not be considered a major land use action and according to 1.5.2., Commission policy is that only the major land use actions listed in Policy 1.5.3 shall be submitted for review.
2. Within the Flabob and Riverside Airports' Areas of Influence, the majority of the Project will be underground except for the Clay Street Connection pump station, which is only a 16-foot-tall unoccupied building.
3. **MM Haz 10** will mitigate any potential issues stemming from the possibility of construction equipment encroaching into the 100-to-1 imaginary surface surrounding the Riverside Municipal Airport.
4. The addition of **MM Haz 11** will ensure that no construction equipment used within the Flabob Airport Influence Area will create a hazard to flight.

No new or more severe significant impacts not previously addressed in the SEIR/EIS were identified by this comment. No further analysis is required.

Response to the
Orange County Water District
Letter Dated March 8, 2011

Comment 1:

OCWD requests that the following issue be addressed in the Environmental Impact Report:

The SEIR/EIS states on page 2.0-4 that one of the purposes of the Riverside-Corona Feeder project is to create "opportunities for future use of recycled water for groundwater basin recharge" and on page 3.0-1 one of the project objectives listed is to "leave available the opportunity for future use of recycled water for groundwater basin recharge." We did not observe any description of specific details or projects in the Draft SEIR/EIS regarding future use of recycled water in relation to the proposed project. Please clarify what is meant by these two statements. Please explain all the anticipated and potential opportunities for future use of recycled water for groundwater basin recharge that may be available due to construction of the Riverside-Corona Feeder project.

We appreciate the opportunity to participate in the environmental review process for the Riverside-Corona Feeder and request that we receive all documents and notices for this proposed project. Thank you.

Response to Comment 1:

The Riverside-Corona Feeder Project is not a recycled water project. No specific recycled project was being referenced in the document, only that recycled water recharge may be one of the types of future projects that may contribute to the conservation and conjunctive use plans for the Basin. There are currently no proposed projects that WMWD is aware of that propose to use recycled water for recharge in the Basin Area, but to avoid confusion that this is a part of the Project or a reasonably foreseeable project, this language will be removed from the Final SEIR/EIS as follows:

- . . . tie into the Chino Desalter Phase 3 expansion to facilitate the connection of WMWD facilities to those that are a part of the Chino Basin Dry-Year Yield Program;
- ~~leave available the opportunity for future use of recycled water for groundwater basin recharge;~~
- improve groundwater quality; . . .

No new significant impacts or information not previously addressed in the SEIR/EIS was identified by this comment. No further analysis is required.

Response to the
City of Riverside Community Development Department,
Planning Division
Letter Dated March 8, 2011

Comment 1:

Thank you for the opportunity to review and comment on the DSEIR for the proposed Riverside Corona Feeder (RCF) Pipeline Realignment project. As indicated in the project description, the Western Municipal Water District is proposing to build the Riverside-Corona Feeder Project which includes a 28-mile large-capacity water pipeline ranging in diameter up to 78-inches, up to 20 new and existing wells, and appurtenant facilities associated with aquifer storage and recovery. The project, which includes federal funding through the Bureau of Reclamation, is intended to deliver water from the Bunker Hill groundwater basin in San Bernardino County to communities throughout western Riverside County.

Pipeline Description

The proposed "Central Reach" segment of pipeline (the segment within the City of Riverside) is proposed to be a maximum 54-inch diameter pipeline and includes two proposed alignment options (the Jackson Street Option and the Monroe Street Option).

Jackson Street Option - The Jackson Street Option crosses under the Santa Ana River along the east side of Van Buren Boulevard. South of the Santa Ana River, the alignment crosses under Van Buren Boulevard to Doolittle Avenue and then to Van Buren Boulevard and continues south in Van Buren Boulevard. The alignment then traverses southeast in Jackson Street, west in Diana Avenue to Wilbur Street, then south under State Route 91 (SR91). South of SR91, the alignment continues northeast in Indiana Avenue, then southeast in Jackson Street, and finally connects to the approved RCF alignment near the intersection of Jackson and Cleveland Streets.

Monroe Street Option – The Monroe Street option would follow the above-described alignment from Van Buren Boulevard southeast in Jackson Street only to Colorado Avenue. At that point, the alignment will continue northeast in Colorado Avenue to Monroe Street, then southeast in Monroe Street, under the State Route 91, and continue to the intersection of Monroe Street and Cleveland Avenue.

Boring techniques will be used to cross under several locations within the City including the Santa Ana River, Van Buren Boulevard near Jurupa Avenue, the intersection of Van Buren Boulevard and Arlington Avenue, State Route 91, the Riverside Canal. City staff has reviewed the DSEIR for the project and offers the following comments:

Response to Comment 1:

The above information regarding the Central Reach of the Project within the city of Riverside is correct.

Comment 2:

Water/Water Quality - The City of Riverside Public Utilities Department (RPU) – Water Division is concerned that the proposed project will have a significant impact to groundwater supplies as a result of the potential groundwater extraction. Page 3.0-11 of the DSEIR analyzes 20 wells, and Page 3.0-12 analyzes extractions up to 40,000 acre feet per year (AFY), and an average of 17,500 AFY. Elsewhere in the document, the project is analyzed to flow 45,000 gallons per minute (gpm), which is more than 72,000 AFY. As a result, the project description is confusing and misleading. The project description must be revised to clearly and unambiguously state the number of wells actually analyzed, and the maximum number of wells possible under the project; the annual extractions actually analyzed, and the maximum annual extractions possible under the project.

Response to Comment 2:

The Project cannot have a significant impact to groundwater supplies due to extraction, because under this Project, Western Municipal Water District ("WMWD") cannot extract any more groundwater than it has previously recharged. In addition, the State Water Project ("SWP") water that WMWD will use to store in the San Bernardino Basin (the "Basin") will be purchased from Metropolitan Water District ("MWD") when there is a surplus available; therefore, even statewide a significant impact to ground and/or surface waters will not result from the Project.

The page references given in **Comment 2**, above, refer to the description of the Project that was already approved and evaluated in the certified 2005 Program EIR for the Riverside-Corona Feeder Project. The Project as analyzed in the 2005 certified Final Programmatic EIR, included recharge and extraction of up to 40,000 acre-ft per year and up to the use of 20 different existing and new wells. However, as the Project Description continues in Section 3.0, it clearly spells out additional aspects of the Project that are evaluated in this Supplemental EIR and under which the Project is proposed to operate, as follows:

> "Operations of the Preferred Alternative [(the Project)] would include the use of existing and/or new wells, as analyzed in the 2005 Project Alignment Final EIR, and/or the use of new wells analyzed as a part of the Central Feeder Connection, described below. Up to a total of 20 wells could be used to properly manage water extractions associated with the RCF. Not all wells would operate at the same time; approximately 25 percent would be pumping at any one time. Wells may be located in the various well fields evaluated in the 2005 Project Alignment EIR and in the Central Feeder Connection area evaluated herein. . .
>
> The Central Feeder Connection consists of approximately 6,350 linear feet of an up to 54-inch diameter pipeline located in the San Bernardino Avenue right-of-way between Alabama Street in unincorporated San Bernardino County and Webster Street in the city of Redlands. . . . Adjacent to the Central Feeder Pipeline are up to five new proposed 350 HP x 2,200 gallons per minute (GPM) groundwater production wells within the well field identified on Figure 1.0-1 [of the Draft EIR/EIS] (exact locations not determined) into the San Bernardino Valley Municipal Water District's Central Feeder Pipeline; thereby providing additional means for transporting San Bernardino Groundwater Basin water through regional pipeline facilities that are connected to the Riverside-Corona Feeder project. These five wells are included within the 20 total wells associated with the RCF.
>
> In conjunction with the evaluation of the above Central Feeder facilities in this SEIR/EIS, proposed operations of the Central Feeder Connection were used as the framework for potential groundwater impacts during periods of drought and emergency periods. Analysis

> provided by Geoscience Support Services, Inc. in March 2010, was based on the following: the RCF is supported by, and fully consistent with, MWD's Integrated Resource Plan, the Santa Ana Watershed Project Authority's Integrated Watershed Plan, and the regional water planning efforts for the cities of Riverside, Norco, Corona, Elsinore Valley Municipal Water District, Jurupa Community Services District, Home Gardens County Water District, Lee Lake Water District, and March Air Reserve Base. Groundwater modeling was performed to assess potential groundwater impacts that might result from the RCF including impacts to the Western Judgment and the Newmark Groundwater Superfund Site. See Sections 4.6 and 4.7 [of the Draft SEIR/EIS] for detailed assumptions and results." (Draft SEIR/EIS, pp. 3.0-22 and 23)

Thus, there will be approximately five wells out of a possible 20 well locations that would be operated for Project purposes at any one time. Each 350-horsepower well is estimated to operate at 2,200 gallons per minute. (Draft SEIR/EIS, p. 3.0-6) Since no page reference was given in the comment for the 45,000 gallons per minute reference, the Draft SEIR/EIS document was searched electronically for the number 45,000, which does not appear in the text; however, if the gallons per minute per each well is multiplied by 20 wells one could arrive at a total pumping capacity of 44,000 gallons per minute. If this is the thinking behind the numbers in **Comment 2**, this is incorrect for two reasons. First, as clarified above, the Project cannot have a significant impact to groundwater supplies due to extraction, because under this Project, WMWD cannot extract any more groundwater than it has previously recharged. Second, with approximately five wells in operation at a time, the estimated extraction rate of the project would not exceed 11,000 gallons per minute. This level of well production equates to approximately 48.61 acre-ft/day. Depending on the amount of water that has been stored in the Basin under this Project (i.e., available water to extract) and the number of days per year pumping might occur, the table below shows example levels of annual extraction that could be achieved if water was available.

Example Number of Days of Production per Year	**Daily Well Production Rate if Five Wells are Pumping (11,000 gpm = 48.61081959008 AF/day)**	**Acre-ft per Year**
100	48.61081959008	4,861
150	"	7,292
200	"	9,722
250	"	12,153
300	"	14,583
365	"	17,743

Based on results of the modeling (Appendix F of the Draft SEIR/EIS), RCF Scenario 1 (least stressful conditions) consists of total artificial recharge (i.e., SWP water) of 42,000 acre-ft and total extraction of 34,500 acre-ft during the 26 years from 2007 through 2032, or an average extraction of 1,327 acre-ft per year; RCF Scenario 2 (most likely conditions) includes total artificial recharge of 150,000 acre-ft and total extraction of 125,800 acre-ft, or an average over the 26 years modeled of 4,838 acre-ft extracted per year; and RCF Scenario 3 (most stressful conditions) includes total artificial recharge of 198,000 acre-ft and total extraction of 163,300 acre-ft, or an average of 6,281 acre-ft per year. (Draft SEIR/EIS, p. 4.6-32) As shown in the modeling results, some years there may be no water available to extract and some years there may not be a need to extract water, so the system allows for the flexibility and potential to extract multiple years of stored available water. The results of the modeling presented here and modeling results associated with the original 2005 PEIR indicate that the Project (Realignment Alternative with Additional Connections) will have less than significant impacts on groundwater resource levels within the Basin Area. (Draft SEIR/EIS, p. 4.6-33)

No new significant impacts or information not previously addressed in the SEIR/EIS was identified by this comment. No further analysis is required.

Comment 3:

What is even more misleading is that extraction volumes analyzed in the DEIR far exceed the volumes represented by Western Municipal Water District (Western) at a December 6, 2010, Project update to the Basin Technical Advisory Committee (BTAC). During that update, Western represented annual extraction to be in the 6,000 to 9,000 acre-foot per year (AFY) range. Subsequently, the minutes of the BTAC meeting represent only 5 wells producing 10,000 to 15,000 AFY. The project represented at the BTAC meeting as and in the minutes is substantially downsized from prior versions of the project with 20 wells, yet the DSEIR remains unchanged and the anticipated pumping rates discussed in the Draft Environmental Impact Report conflict significantly with the values represented at the BTAC as well as those represented in subsequent BTAC minutes.

Response to Comment 3:

See **Response to Comment 2**, above.

Comment 4:

The project represented in DSEIR as it currently exists will have a significant unmitigated impacts on groundwater levels due to substantial depletion of groundwater supplies and will interfere substantially with groundwater recharge such that there is a net deficit in aquifer volume and lowering of the groundwater table level as the project has the potential to extract and convey far more water than can be supported. Western does not have access to 40,000 AFY of imported water volumes to recharge. The DSEIR must identify and analyze the source of that 40,000 AFY of water, and the associated impacts. An extraction volume of 40,000 AFY (average year) is approximately 20 percent of the basin safe yield. Moving that proportion of water must be studied in much more detail. It will have significant impacts on existing production volumes and rates.

Response to Comment 4:

See **Response to Comment 2**, above. It is correct that WMWD does not have access to 40,000 AFY of imported water volumes to recharge at this time. At present, if the Project facilities were in place, WMWD has access to 6,000 AFY for extraction that has been stored pursuant to the certified 2005 PEIR and agreement with MWD for water delivery. The source of the water that will be used to recharge under this Project is imported SWP water in years when surpluses are identified by the state and available to purchase from MWD; however, it is unlikely that MWD will have 40,000 acre-ft of surplus SWP available to sell in any given future year. State Water Project water was analyzed in the Draft SEIR/EIS as the source of all water for recharge.

The safe yield is the amount of water that can be annually pumped from a basin on a permanent basis without adversely affecting the Basin. The San Bernardino Groundwater Basin Area (the "Basin") has been adjudicated through what is referred to as the Western Judgment and as described in the Draft SEIR/EIS. The safe yield of the Basin is determined pursuant to the Western Judgment. "The Western Judgment" generally provides for the following:

- A determination of safe yield of the San Bernardino Basin Area ("Basin Area");

- Establishment of 64,872 AF rights that can be extracted from the SBBS by plaintiff parties. This is equal to 27.95 percent of safe yield;
- A obligation of Valley District to replenish any extractions from Basin Area by non-plaintiffs in aggregate in excess of 167,228 AF (equal to 72.05 percent of safe yield); An obligation of WMWD to replenish the Colton and Riverside Basins if extractions for use in Riverside County in aggregate exceed certain specific amounts; and
- An obligation of Valley District to replenish the Colton and Riverside basins if water levels are lower than certain specific water level elevations in specified wells." (SAWPA, p. 112)

"The Western Judgment is administered by the two-person Western-San Bernardino Watermaster—one person nominated each by Valley District and WMWD, and both appointed by the court." (SAWPA, p. 113) Pursuant to the Western Judgment, "The Watermaster has determined the natural safe yield of the water supply accruing to the San Bernardino Basin Area at 232,100 acre-ft per annum from which the Adjusted Rights of Plaintiff exporters were also determined." (WSBWMa, p. 30) Compared to this, the project's likely withdrawals at maximum well production, as now proposed in the Realignment Project description would represent 4.7 percent of safe yield, but this volume could only be extracted if it had already been stored in the Basin, thus impacts to the safe yield of the Basin will be less than significant as determined in the Draft SEIR/EIS.

In addition, "WMWD has been participating in ongoing management efforts with the Basin Area Technical Advisory Committee (BTAC) which will assure that this project is included and managed to avoid adverse impacts to water levels in the Basin Area." (Draft SEIR/EIS, p. 4.6-38) The ongoing monitoring and adaptive management required by **MM GWL 2 (Revised)** includes the Project's management plan be developed and tested using the groundwater modeling employed by the BTAC (or its successor or assignee) on an annual basis. If such modeling predicts that Project operations would result in a water level reduction of greater than 10 feet, the Project operation shall be modified to reduce impacts to less than significant levels through increased, decreased or no replenishment, replenishment at an alternative location, increased, decreased or no extraction, or extraction at targeted locations. No new significant impacts or information not previously addressed in the SEIR/EIS was identified by this comment. No further analysis is required.

Comment 5:

In addition, the DSEIR cannot rely upon the current San Bernardino Basin Area (SBBA) basin model. The recently completed peer review of the model identified errors in model parameters in parts of the basin, causing errors in the model output. For example, the existing model shows high groundwater condition in the foothills, and not in the historical high groundwater areas.

Response to Comment 5:

The City of Riverside's comments on the Draft SEIR/EIS expressed their concern that model results do not accurately represent predicted conditions in the Basin as a result of the RCF Project. This concern is from errors in model parameters identified in a recently completed independent peer review. To address this concern, GEOSCIENCE (one of the consultants hired to create the model) provided the response and analysis below, which is consistent with WMWD's understanding.

"The RCF conjunctive use scenarios proposed in the Draft SEIR/EIS were evaluated by GEOSCIENCE using the Refined Basin Flow Model/Newmark Groundwater Flow Model (RBFM/NGFM) and the Refined Basin Solute Transport Model (RBSTM). The current versions of these models represent highly

refined versions of the initial modeling efforts that have evolved over the past four decades. Various groundwater flow models and refinements form part of the evolution of the current RCFM.NGFM and RBSTM, which include:

1. The first numerical model of the area (1966-67) by Tyson, Weber, and Frankel of the California Department of Water Resources.
2. A simplified well0respinse model by Durbin (1974), and Durbin and Morgan (1978) of the USGS.
3. A more complex groundwater flow model by Hardt and Hutchinson of the USGS.
4. The USGS basin Flow Model developed by Danskin of the USGS. This model formed the basis for the current model refinement.
5. Updated USGS model code (MODFLOW-2000) and added a solute transport component.
6. Refinement USGS model cell size from 820 ft. by 820 ft. to 102.5 ft. by 102.5 ft.
7. Modified the USGS model from two layers to five layers.
8. Extended the end of the model period from 2000 to 2006.
9. Refined the annual stress periods from 1983 to 2006 to monthly stress periods.
10. Developed TCE and PCE solute transport models.

The most recent refinement processes were conducted through a cooperative technical effort involving representatives of San Bernardino Municipal Water District (SBMWD) and San Bernardino Valley Municipal Water District (SBVMWD), their respective consultants at Stantec Consulting (Stantec) and GEOSCIENCE, and Mr. Wes Danskin of the USGS. This working technical group is the makeup of the current RBFM/NGFM modeling team (Modeling Team). One primary benefit of these refinement efforts is that the RBFM/NGFM and RBSTM, which are an approximation of a complex field situation, continue to improve and gain value as a water resources management tool for the San Bernardino Basin Area.

GEOSCIENCE has played a vital role in the development and refinement processes of these models since the USGS Basin Flow Model was undated (including preparation by GEOSCIENCE of the *Initial Report of Recharge Parties Pursuant to RWQCB Resolution No. R8-2008-2019, Bunker Hill-A, Bunker Hill-B, Lytle, Rialto, Colton and Yucaipa Management Zones* for SBVMWD). GEOSCIENCE has extensive experience using these models to evaluate key groundwater characteristics of the Basin Area, which included:

- Interaction between surface streams and groundwater,
- Groundwater flow,
- Groundwater quality,
- Groundwater path lines,
- Travel distances of groundwater contaminant plumes,
- Groundwater budgets,
- Artificial recharge and associated growth and decay of groundwater mounds,
- Potential liquefaction, and
- Aquifer system compaction (i.e., subsidence).

The table below summarizes the major projects in the Basin Area for which GEOSCIENCE has preformed modeling work.

Year	Project	Purpose of Model	Client
2004	Santa Ana River Water Rights Applications for Supplemental Water Supply Draft EIR	Groundwater Flow, Particle Tracking, Groundwater Quality, Groundwater Recharge, Subsidence	WMWD/ SBVMWD
2005	Riverside-Corona Feeder Project-Phase I Groundwater Modeling Results	Groundwater Flow, Particle Tracking, and Groundwater Quality	WMWD
2007	Upper Santa Ana River Watershed Integrated Regional Water Management Plan	Groundwater Flow and Groundwater Quality	Upper Santa Ana Water Resources Association
2009	San Bernardino Basin Area-Refined Basin Flow Model and Solute Transportation Model Report	Groundwater Flow, Groundwater Quality, Potential Liquefaction, Groundwater Budgets	SBVMWD

Per the request of the Institutional Controls Groundwater Management Program (ICGMP)[23], the RBFM/NGFM underwent an independent peer review following the completion of the model refinements. Balleau Groundwater, Inc. (Balleau Groundwater) was contracted to perform the peer review. Peer review comments were provided by Balleau Groundwater in the form of a report, dated December 15, 2010.

A BTAC meeting was held in January 2011 to address the concerns identified in the model review report. The major concerns that were identified from Balleau's review of the current RBFM/NGFM include: (1) model-calculated shallow groundwater in the Pressure Zone is not consistent with observed field data; and (2) model layers that "pinch out" (i.e., merge together vertically) in the mountain front areas of the Basin Area is not comparable with the USGS Basin Flow Model, and could result in water levels to fall below model layer 1 which do not account for storage changes responding to fluctuations in water levels over 200 ft in the mountain front area.

Upon consideration of Balleau's identified issue regarding shallow groundwater in Pressure Zone, the Modeling Team determined that the current RBFM/NGFM was calibrated adequately for the intended purpose of evaluating the potential liquefaction areas (i.e., areas with depth to water shallower than 50 ft.) in Basin Area. For example, the areas calculated by the RBFM/NGFM as having a depth of water less than 50 ft. in 1983 were determined to be similar to the area previously mapped by Matti and Carson (1991) and based on observed field data by Martin and Lew (1999).

To address Balleau's concern regarding the model structure, the Modeling Team determined that the depth to bedrock in the mountain front area used for the 2009 version RBFM/NGFM is consistent with the following published documents:

- DWR Bulletin 104-5 (1970)
- CDMG Special Report 113 (1976)
- USGS Open-File Report 81-576 (1980)
- GEOSCIENCE (1993)
- Wildermuth Environmental (2000)
- USGS Open-File Report 00-193 (2000)

[23] The ICGMP group was established in response to concerns voiced by municipalities with interests within the Basin Area during the Draft Consent Decree and Statement of Work administered by the EPA and California Department of Toxic Substance Control (DUSC) for the Newmark Groundwater Contamination Superfund Site cleanup projects in the Basin Area.

The geologic cross-section provided in the report for the USGS Basin Flow Model was used only to illustrate the conceptual model of the valley-fill aquifer. Therefore, the peer reviewer's comment on the current RBFM/NGFM is not a concern for the modeling results of the RCF Project.

In response to Balleau's comments, a work plan has been developed and proposes to provide additional enhancements to the RBFM/NGFM and RBSRM to improve its accuracy, functionality and make it accessible to the public via the internet. As with the past RBFM/NGFM modeling efforts, the Modeling Team will work closely together to prepare the proposed modeling enhancement scope of work outlined in the proposed work plan. The scope of work is intended to address GEOSCIENCE's and Stantec's recommendations as provided in previous modeling reports and to address Balleau Groundwater's peer review comments.

It is the important to note that the purpose of using the RBFM/NGFM and RBSRM for the RCF Project was to assess the potential impacts of the RCF on groundwater levels and groundwater quality in the Basin Area. In general, this assessment was made by comparing water levels and water quality predicted by the RBFM/NGFM and RBSTM (i.e., RCF Project Scenarios 1 though 3) to a Baseline Run (No Project). Upon approval of the proposed work plan and completion of the scope of work, the RBFM/NGFM and RBSTM can be used to evaluate the proposed Project without the concerns identified in [Comment 5, as required by **MM GWL 2 (Revised)**.]"

As GEOSCIENCE is an expert consulting firm with respect to groundwater modeling efforts within the Basin Area, and the Modeling Team includes the two major water providers in the Basin Area and the USGS, WMWD is confident that the modeling performed for the Draft SEIR/EIS was the best available at the time of preparation of the document. GEOSCIENCE has prepared a proposal to make modifications that will further refine the model, but even if that work were underway today, it would be over a year before it is complete which is an unreasonable and unnecessary delay of the CEQA process. No new significant impacts or information was identified by this comment. No further analysis is required.

Comment 6:

All of RPU's Gage wells are located downstream of the recently identified Project well locations, which are in a position to intercept water recharged in the Santa Ana River Spreading Grounds.

During the dry years, less groundwater will reach RPU wells. The DSEIR must analyze the impacts to existing wells and groundwater supplies, at the maximum Project capacity. The maximum extraction capacity analyzed must be 72,000 AFY, the pipeline carrying capacity.

Response to Comment 6:

See **Responses to Comments 2, 4,** and **5**, above, which address in greater detail the following:

It is correct that the recently identified Project well locations are located upstream of RPU's Gage wells and have been sited in this location to address concerns by City of San Bernardino Municipal Water Department regarding water quality associated with its Newmark Groundwater Contamination Remediation project. However, operation of this Project may involve wells in well field locations which were analyzed in the 2005 PEIR if required annual modeling identifies a need for such. In addition as discussed in Response to Comment 4, "WMWD has been participating in ongoing management efforts with the Basin Area Technical Advisory Committee (BTAC) which will assure that this project is included and managed to avoid adverse impacts to water levels in the Basin Area." (Draft SEIR/EIS, p. 4.6-38) The ongoing monitoring and adaptive management required by **MM GWL 2 (Revised)** includes

the Project's management plan be developed and tested using the groundwater modeling employed by the BTAC (or its successor or assignee) on an annual basis. If such modeling predicts that Project operations would result in a water level reduction of greater than 10 feet, the Project operation shall be modified to reduce impacts to less than significant levels through increased, decreased or no replenishment, replenishment at an alternative location, increased, decreased or no extraction, or extraction at targeted locations. **Response to Comment 5**, above, discusses the ongoing improvements to the modeling efforts and the validity of the modeling used in the SEIR/EIS.

The Project cannot have a significant impact to groundwater supplies due to extraction, because under this Project, WMWD cannot extract any more groundwater than it has previously recharged. In addition, see **Response to Comment 2**, above, depending on the amount of water that has been stored in the Basin under this Project (i.e., available water to extract) and the number of days per year pumping might occur, the maximum level of annual extraction assuming 25 percent of the wells are operating 365 days per year is 17,743 acre-ft.

No new significant impacts or information not previously addressed in the SEIR/EIS was identified by this comment. No further analysis is required.

Comment 7:

The DSEIR does not evaluate potential impacts to Total Dissolved Solids (TDS) concentrations in the City's sewage treatment plant effluent. Substantial volumes of imported water with higher TDS recharged in the SBBA basin will increase TDS levels in RPU groundwater supplies. TDS increases in the water supply may force the City and others to desalt effluent at substantial cost to avoid a National Pollutant Discharge Elimination System (NPDES) permit violation.

Response to Comment 7:

This comment identifies the City's concern that the Project's recharge of SWP water would eventually increase the total dissolved solids (TDS) concentration of ambient groundwater, possibly leading the City of Riverside to exceed its Regional Board TDS discharge limit. The following describes the baseline for TDS levels in SWP water and the Draft SEIR/EIS analysis results followed by details of the City's waste discharge permit requirements.

Total Dissolved Solids Information:
TDS levels of SWP water vary by month and overtime. For 2006, SWP water averaged TDS level was 181 mg/L. From October 2008 to September 2009 TDS ranged between 225 and 325 mg/L with the overall SWP water at the Devil Canyon Afterbay averaging 250 mg/L. (Draft SEIR/EIS, pp. 4.7-21 to 4.7-22) The Draft SEIR/EIS lists the existing TDS conditions in 2007 for City of Riverside Raub 1 Well and Gage Canal Company Lower Kelly Well which were both 280 mg/l. (Draft SEIR/EIS Table 4.7-D, p.4.7-28)

The potential impact from the Project on TDS concentrations in the Basin was evaluated using the Refined Basin Solute Transport Model (RBSTM) and results were reported in Section 4.7 of the Draft SEIR/EIS beginning on page 4.7-21 and in Appendix F of the Draft SEIR/EIS. The evaluation included four predictive model runs to evaluate water quality changes for a Baseline Run (No Project) and three Project conjunctive use scenarios (Scenarios 1 through 3). The sources for TDS concentrations that were input into the model included:

- Direct infiltration from precipitation
- Recharge from local runoff generated by precipitation

- Artificial recharge, Return flow from groundwater pumping
- Recharge from mountain front runoff
- Underflow recharge
- Streamflow

Description of the assumptions used are provided in Section 3.2 of the *Groundwater Modeling of TDS and Nitrate-Nitrogen Concentrations – Riverside-Corona Feeder Project Conjunctive Use Scenarios* (GEOSCIENCE 2010a), in Appendix F of the Draft SEIR/EIS. State Water Project water is one of three components (Santa Ana River water and recycled water being the other two) used to artificially recharge the Basin and the only component to be used for recharge under this Project. The TDS concentration for SWP water was assumed to be equal to or exceed 255 milligrams per liter (mg/L) 50 percent of the time during the simulation period (see Figure 4 in the referenced report). Initial concentrations for TDS in the Basin Area were based on the 1987-2006 ambient concentrations calculated by Wildermuth Environmental, Inc. in 2008.[24] Artificial recharge of SWP water was predicted to range from 42,000 acre-ft to 198,000 acre-ft over a period of 26 years.

Model-predicted TDS concentrations within the Basin Area for Scenarios 1 through 3 were found to be similar to those for the Baseline Run (No Project).[25] These results are included in Table 4.7-C of the Draft SEIR/EIS for the three Upper Santa Ana River Basin Groundwater Management Zones (GMZs). These data indicate that the Project will not exceed the Baseline (No Project) model run (i.e., future conditions without the Project) in the Bunker Hill A and B GMZs. With or without the project, the future condition is expected to exceed ambient TDS levels and the Regional Water Quality Control Board's TDS goal for these GMZs (Draft SEIR/EIS, p. 4.7-24) however, overall the Project does not substantially worsen this condition.

The City of Riverside currently relies upon approximately 38 groundwater production wells located with the San Bernardino Basin Area to extract groundwater supplies. A summary of model predicted TDS concentrations for these wells 38 wells under No Project and Scenarios 1 through 3 are provided in Table 1 of GEOSCIENCE's Technical Memorandum dated August 15, 2011, reproduced below for ease of reference. The average change in TDS concentration between the No Project and Scenarios 1 through 3 after a period of 26 years (i.e., the overall impact of the Project if no other changes occurred during the 26 year period) ranges from 0.47 mg/L to 2.77 mg/L. Baseline model-predicted TDS concentration range from 268.58 mg/L to 475.75 mg/L so the average changes expected to result from the Project are negligible (0.17% to 0.58%) over 26 years.

[24] Wildermuth Environmental, Inc., *Recomputation of ambient Water Quality in the Santa Ana Watershed for the Period 1987 to 2006*, 2008. Prepared for Santa Ana Watershed Project Authority.
[25] Figures 11 through 14 from *Groundwater Modeling of TDS and Nitrate-Nitrogen concentrations – Riverside-Corona Feeder Project Conjunctive Use Scenarios* (GEOSCIENCE 2010a).

Response to Comments on Draft SEIR/EIS for the Riverside-Corona Feeder Project

Table 1

Model Predicted TDS Concentrations for City of Riverside Wells within the SBBA

Count	Well	Model-Predicted TDS Concentration [mg/L]				Change from Baseline [mg/L]		
		Baseline	Scenario 1	Scenario 2	Scenario 3	Scenario 1	Scenario 2	Scenario 3
1	COOLEY H	288.53	288.63	288.94	289.20	0.09	0.40	0.67
2	COOLEY I	326.98	326.67	326.68	327.44	-0.31	-0.30	0.46
3	COOLEY J	330.33	330.90	331.85	333.08	0.57	1.52	2.75
4	GAGE 26-1	376.93	377.10	377.08	378.04	0.17	0.15	1.11
5	GAGE 27-1	410.16	410.39	410.55	411.93	0.23	0.39	1.77
6	GAGE 27-2	423.93	424.04	424.26	425.83	0.11	0.33	1.90
7	GAGE 29-1	421.82	421.92	422.20	423.76	0.09	0.38	1.94
8	GAGE 29-2	347.81	347.98	347.54	348.05	0.16	-0.28	0.23
9	GAGE 29-3	327.24	327.18	325.64	325.68	-0.06	-1.60	-1.56
10	GAGE 30-1	304.99	305.52	306.42	307.57	0.52	1.43	2.58
11	GAGE 31-1	350.42	351.87	354.87	356.58	1.44	4.44	6.15
12	GAGE 46-1	307.05	308.15	310.11	312.02	1.11	3.06	4.97
13	GAGE 51-1	316.80	317.06	316.90	317.76	0.26	0.10	0.96
14	GAGE 56-1	276.64	276.64	277.28	278.68	-0.01	0.64	2.03
15	GAGE 66-1	333.03	333.05	333.26	334.43	0.02	0.22	1.40
16	GAGE 92-1	331.42	331.41	330.71	331.17	-0.02	-0.71	-0.25
17	GAGE 92-2	277.85	277.32	277.00	277.20	-0.53	-0.84	-0.64
18	GAGE 92-3	268.58	266.87	266.03	266.09	-1.70	-2.55	-2.49
19	GAGE 98-1	302.48	302.56	302.47	303.16	0.08	-0.01	0.68
20	GARNER 1	349.30	350.06	351.54	354.39	0.76	2.24	5.09
21	GARNER 2	345.87	347.04	348.62	350.02	1.17	2.75	4.15
22	GARNER 4	330.06	330.07	330.34	332.42	0.02	0.29	2.37
23	GARNER 5	433.07	433.96	435.52	437.82	0.89	2.45	4.75
24	GARNER 6	414.49	415.75	417.90	421.43	1.26	3.41	6.94
25	GARNER 7	343.65	344.19	345.32	348.05	0.54	1.67	4.40
26	HUNT 10	414.42	414.37	414.46	416.30	-0.05	0.04	1.88
27	HUNT 11	406.69	406.61	406.71	408.45	-0.07	0.02	1.77
28	RAUB 4	353.31	354.95	356.93	358.52	1.64	3.62	5.21
29	RAUB 5	370.67	372.89	376.71	378.93	2.23	6.05	8.26
30	RAUB 6	407.89	409.12	411.28	413.53	1.23	3.38	5.64
31	RAUB 7	383.98	384.63	385.14	386.47	0.66	1.16	2.49
32	RAUB 8	429.03	429.50	430.46	432.91	0.47	1.44	3.89
33	SCHEUER	514.57	514.59	514.80	517.10	0.01	0.23	2.53
34	STILES	426.11	426.71	427.57	430.44	0.60	1.46	4.33
35	THORNE 12	475.75	478.48	481.57	485.99	2.73	5.82	10.24
36	TIPPECANOE	341.32	341.43	341.19	341.96	0.10	-0.13	0.63
37	WARREN 1	405.38	405.65	405.78	407.96	0.27	0.40	2.58
38	WARREN 4	432.13	433.32	433.74	435.46	1.19	1.61	3.33
					Average Change	**0.47**	**1.18**	**2.77**
					Maximum Change	**2.73**	**6.05**	**10.24**
					Minimum Change	**-1.70**	**-2.55**	**-2.49**

15-Aug-11 GEOSCIENCE Support Services, Inc.

Table 4.7-D of the Draft SEIR/EIS also presents TDS concentrations for various jurisdictions' individual wells, including production wells, monitoring wells and out of service wells used to monitor water levels. These data indicate that the Project will increase TDS levels at the City's Raub 1 Well (by 2 to 9 mg/L, or 0.52% to 2.36%) and Gage Canal Company Lower Kelly Well (by 0 to 2 mg/L, or 0.0 to 0.7%). Without the project, the Baseline Run (No Project) (i.e., future condition without the project) is expected to exceed ambient TDS levels by 101 mg/L at the Raub 1 Well and 148 mg/L at the Gage Canal Well. In general, any future increases in TDS concentrations in the Riverside wells are predicted to be minimal and primarily related to changes that are predicted to occur with or without the Project.

City of Riverside Waste Discharge Permit Requirements

The City of Riverside is subject to California Regional Water Quality Control Board Santa Ana Region Waste Discharge and Producer/User Reclamation Requirements under Order No. R8-2009-0052 amending Order No. R8-2006-2009, NPDES No. CA0105350. Basically, the permit has two different, but related, TDS limits with the lower of the two being the ultimate limit, as follows:

1. The 12-month flow weighted running average TDS constituent concentration and mass emission rate shall not exceed 650 mg/L and 216,840 lbs/day, respectively, unless certain conditions can be demonstrated to the satisfaction of the Regional Board's Executive Officer.

2. The 12-month flow weighted running average TDS concentration shall not exceed the 12-month flow weighted running average TDS concentration in the water supply by more than 250 mg/L, unless certain conditions can be demonstrated to the satisfaction of the Regional Board's Executive Officer.

In its permit, the City has acknowledged that SWP water is of high quality. "The City has noted that there is the potential for increases in TDS concentration in the potable water served in the service areas due, in part, to decreasing importation of high TDS quality State Project Water, decreasing reliance on high TDS quality groundwater pumped from the Bunker Hill Bain, and increasing reliance over the long-term on poorer quality water pumped from part of the Riverside Basin." (Order No. R8-2009-0052, p.1)

Thus, if the water supply average TDS concentrations remain at or below 400 mg/L and the "use increment" of 250 mg/L discussed and authorized in the Basin Plan (Order No. R8-2006-0009, p. F-14), is not exceeded, then the effluent limit of 650 mg/L is not exceeded. The recharge of SWP water at an average 250 mg/L is well below 400 mg/L and the Project's minor increases over 26 years will not contribute significantly toward exceeding this limit.

No new significant impacts or information not previously addressed in the SEIR/EIS was identified by this comment. No further analysis is required.

Comment 8:

The proposed Project will be using the existing recharge facilities in SBBA to recharge the imported water. Most of the imported water available for recharge is available during the wet years. During the wet years, the existing recharge facilities are fully utilized for re-charging of local waters and San Bernardino Valley Municipal Water District's (SBVMWD's) imported water State Water Project's (SWP) Table A allocation required to maintain the basin Safe Yield. The proposed Project by Western may need new recharge facilities to implement the Project. The DSEIR must consider and analyze those new facilities, and may not defer that analysis until SWP conditions meet the Project capacity. The Project impacts must be analyzed now, at the maximum capacities, at maximum Project construction to enable those capacities. To do otherwise is impermissible segmentation of the Project to avoid finding impacts.

Response to Comment 8:

No additional studies are needed to assess the availability/adequate capacity of the existing recharge basins proposed to be used for recharge by this Project. Due to the fact that surplus SWP water is the sole source of water being utilized for recharge as a part of this Project, WMWD can work with SBVMWD and/or have the delivery of SWP water held until the basins are available to receive more water, such as summer, so that there is no interference with the needs of local agencies to recharge surface water during wetter periods or SBVMWD's Table A allotments.

See also **Responses to Comments 2, 4,** and **5**, above. No new significant impacts or information not previously addressed in the SEIR/EIS was identified by this comment. No further analysis is required.

Comment 9:

Either the Project must be physically downsized to the 6,000-9,000 AFY which has recently been represented, or the 10,000-15,000 AFY actually analyzed; or, the environmental analysis must be revised to fully analyze, address and mitigate the Project's actual capacities at build out, including 72,000 AFY of water flow through the proposed pipeline, and where that water will come from, and the impacts of providing that water.

Response to Comment 9:

See **Responses to Comments 2** through **8**, above. No new significant impacts or information not previously addressed in the SEIR/EIS was identified by this comment. No further analysis is required.

Comment 10:

Traffic - The Traffic Impact Analysis (TIA) of the DEIR does not identify detour routes or analyze potential impacts to "nearby" streets affected by the road closures and/or detours. Detours along Jackson and Monroe Streets may impact residential streets which are not designed to accommodate large number of vehicles or truck traffic for extended periods of time. Without further analysis of impacts related to traffic and traffic hazards, noise, and air quality as a result of detours through residential areas, the EIR fails to show that the potential impacts to residences (sensitive receptors) will be less than significant. The DEIR needs to analyze the impacts of detours on residential areas and identify appropriate mitigation measures where needed to reduce impacts a less than significant level. The preferred mitigation is to require that detours avoid residential streets and restrict detour traffic via Van Buren Boulevard or Monroe Street with the Jackson Street Alignment or via Jackson Street or Adams Street with the Monroe Street Alignment. Impacts to residents as a result of detours need to be fully mitigated and appropriate mitigation identified.

Response to Comment 10:

Pages 4.12-22 through 4.12-25 identifies city of Riverside intersections within the Central Reach of the Project and state below the individual street description (if applicable) that, "In order to achieve satisfactory levels of service during the impacted phases of construction at this intersection, non-peak hour construction and/or additional detours will be required." It has not been envisioned that detours would impact residential streets, however, WMWD would be willing to detour traffic onto larger streets as recommended in the above comment.

Mitigation measures **MM Trans 2, 2a,** and **3** require a *Traffic Control and Safety Plan* and coordination with the City of Riverside for areas within its jurisdiction. Specifically, **MM Trans 2a** requires "circulation and detour plans to minimize impacts to local street circulation . . ." During the process of preparing, reviewing and approving the *Traffic Control and Safety Plan* for any portion of the Project located within the city limits, City staff may identify which streets are appropriate if traffic must be detoured to another street. Therefore, potential impacts to residential streets will be avoided.

Additionally, construction traffic generated by the Project will be minimal. "Traffic increases due to the proposed project will consist of construction worker vehicles and trucks hauling dirt or delivering materials. The numbers of vehicles varies somewhat depending on the type of construction being performed, tunneling/boring or traditional trenching. The proposed project's traffic will represent a small increase in relation to the existing traffic in some areas and a larger increase in relation to existing traffic in other locations. In general, however, impacts to traffic from the project will consist of minor (less than 100 trips per day) short-term increases in vehicle trips which will be a less than significant increase in traffic." (Draft SEIR/EIS, p. 4.12-27)

No new significant impacts or information not previously addressed in the SEIR/EIS was identified by this comment. No further analysis is required.

Comment 11:

Additional City Public Works Department Requirements for work in City Streets

The City's Public Works Division's preferred alignment is the Monroe Street alignment. Prior to construction, a traffic control plan shall be submitted to the City Public Works Department for review and approval for all construction work within City Limits. The prospective traffic control plan needs to adequately address the following concerns:

- Avoid detouring traffic through residential neighborhoods and streets.
- Where residential or collector streets are affected, the traffic control plan must require rehabilitation of damage caused to residential and collector streets during the construction.
- Avoid loss of signal detection loops (for traffic signals) at intersections during construction.
- Per Figure 1-A of the TIA, Typical Open Trench Detail, shows that the open trench width will be Pipe Diameter (54-inch diameter) + 40 inches for a total open trench width of 94 inches. The City requires that all travel lanes on Van Buren be opened during non-working hours which means that the contractor will need to provide "steel plate bridging". The City will require a structural design prepared by a Civil Engineer where the span exceeds the maximum, allowable non-engineered span of 63 inches. The City Public Works Department will not allow long term lane closures on Van Buren.
- The traffic control plan needs to determine if Jackson or Monroe Streets will also have "steel plate bridging" during non-working hours or whether the contractor will be closing the lanes or roadway with long term traffic control devices such as k-rail.
- The Contractor needs to provide language in the project specifications to ensure the red light enforcement system at Van Buren at Arlington is not impacted. If the contractor anticipates impacts to the system they need to discuss those impacts with the Public Works Department. The Public Works Department will need to review the plans, impacts, duration of impacts, and provide specification language to minimize red light enforcement shutdowns during the pipe installation.
- The project needs to clarify the work hours especially for segments or intersections shown not to be impacted during peak traffic hours. The City needs to know if the proposed work hours will be from 9:00 a.m. to 3:30 p.m. or whether night work is proposed since nighttime construction activities may impact local residential neighborhoods (noise levels may be an issue).

Response to Comment 11:

Mitigation measures **MM Trans 2** and **MM Trans 2a** (Draft SEIR/EIS, pp. 4.12-37 and -38) require Traffic Control and Safety Plans; **MM Trans 3** requires coordination with affected local jurisdictions to address potential conflicts with underground facilities and planned/in-progress Capital Improvement Projects; **MM Trans 4** addresses the potential for nighttime construction and limitations on such activity.

The following specifically address each bulleted recommendation above:

1. Pursuant to **MM Trans 2, 2a, 3** and **13**, the City will have the opportunity to identify which streets are appropriate for detours if any are required; thus, the City will be able to require that residential streets be avoided. Likewise, the City can mandate where and when steel plates need to be installed during construction, how long lane closures may occur on Van Buren Boulevard, what types of traffic control devises will be used if lanes need to be closed and the daily work hours (vs. nighttime construction);
2. Mitigation measure **MM Trans 12** requires WMWD to "restore any impacted public street, sidewalks, bikeways and trails to their pre-construction condition, following completion of each individual construction project as mutually agreed between WNWD and the local jurisdiction prior to construction." Therefore, damage caused to streets will be replaced;
3. **MM Trans 12** addresses the issue of signal detection loops as described in item 2, above;
4. See item 1, above.
5. See item 1, above.
6. To address the City's concern regarding the red light enforcement system at the intersection of Van Buren and Arlington and a similar concern about existing facilities/systems raised by the City of San Bernardino, mitigation measure **MM Trans 3** is revised in the Final SEIR/EIS, as follows, which will allow the City of Riverside to ensure that the plan specifications require avoidance or concurrence from the City and that impacts will be less than significant:

   MM Trans 3: Prior to the commencement of each individual construction project, WMWD <u>and its contractor</u> shall consult with the affected local jurisdiction(s) in order to coordinate project construction with applicable Capital Improvement Projects<u>, underground facilities and/or other known potential items needing to be taken into account during final design, plan specifications and/or construction so that issues can be avoided and/or remedies included in the specifications that meet with each jurisdiction's requirements</u>.

7. See item 1, above, and **MM Noise 1** which requires that "the hours of construction shall be limited to those that would cause the least noise disruption to the sensitive uses and in consultation with the local jurisdiction" for all noise sensitive uses within ¼-mile of the construction site. (Draft SEIR/EIS, p. 4.10-31) The Draft SEIR/EIS determined that construction noise was reduced to less than significant levels through compliance with regulations and implementation of this and other noise-related mitigation measures. (Draft SEIR/EIS, p. 4.10-30)

No new significant impacts or information not previously addressed in the SEIR/EIS was identified by this comment. No further analysis is required.

Comment 12:

Noise - Because detour routes have not been identified, the noise analysis has not adequately analyzed or mitigated impacts to sensitive receptors as a result of added traffic noise from detouring traffic including truck traffic onto residential streets. In addition, Mitigation Measure Noise 1 states that: "

"A minimum of 30 days prior to commencement of construction projects for all reaches and facilities, Western shall identify all noise-sensitive receptors (e.g., residential dwellings, hotels, hospitals, nursing homes, schools and libraries) within one-quarter mile of the active construction area. If construction is planned to occur within a quarter mile of a sensitive receptor, the hours of construction shall be limited to those that would cause the least noise disruption to sensitive uses and in consultation with the local jurisdiction. Mitigation could include such approaches as:

- *Allowing nighttime construction in commercial/industrial areas or adjacent to schools which operate only during the day.*
- *Prohibiting nighttime construction in residential areas.*
- *Time of year construction, such as during a school holiday week.*
- *If more than one sensitive receptor that might warrant opposite approaches to hours of operation is affected by the same construction location, the hours of construction allowed by local jurisdictions regulations shall apply."*

Because it is unknown at this time where traffic detours and construction will specifically occur in relation to sensitive receptors, the level of impact will be on sensitive receptors has not been fully analyzed. In addition, MM Noise 1 only identifies mitigation that could be, rather than mitigation that shall be required. Therefore, the DSEIR has not demonstrated that the mitigation measures will reduce impacts to a less than significant level, and the DSEIR inappropriately defers analysis and specific mitigation measures for noise impacts. Further analysis and more specific mitigation measures are needed to adequately address noise impacts.

Once again thank you for the opportunity to comment on the project. We look forward to continued communication and coordination on this project. Should you have any questions regarding this letter, please feel free to contact Doug Darnell, Senior Planner at (951) 826-5219 or ddarnell@riversideca.gov.

Response to Comment 12:

Construction-related traffic is likely to utilize existing main roads in the vicinity, and haul routes and detours, if required, will be identified in the *Traffic Control and Safety Plan* which the City will review and approve prior to issuance of an encroachment permit. (See **Response to Comment 11**.) Construction of the Project in any one location is short-term. The passage of heavy, construction truck-traffic by existing residences will be episodic, and more of a single event-type noise impact (will not significantly raise the noise level over the City standard) and will result in potential short-term intermittent annoyances, the effect in long-term ambient noise levels would be small when averaged over a longer period of time.

As there is anticipated to be less than 100 additional Project-related vehicular trips on roads within the Project's vicinity, the Project's contribution to traffic noise would be incremental and less than significant. For example, if there were 500 vehicles on a road segment and the Project-related traffic increased that number to 600 vehicles, the noise level produced by that increase would be less than 1 decibel. As stated on page 4.10-6 of the Draft SEIR/EIS, "it is widely accepted that the average healthy ear can barely perceive a noise level change of 3 dBA as this increase can usually only be detected in a quiet or laboratory setting. An increase in 5 dBA is more readily discernable and considered easier to perceive in an exterior environment that includes some background noise." For quieter areas where the Project may be constructed, such as Jackson or Monroe Streets near Victoria Avenue, the existing AM peak hour trips are approximately 300 (some of the lowest along the Project alignment) which would generate a level of 49.7 dBA. The addition of 100 Project trips would raise the level to 50.9 dBA for a difference of 1.2 dBA, a hardly perceptible change and far less than the 5 dBA increase needed to warrant a significant impact.

Detailed noise analysis was performed along the Project alignment for construction noise in the Central Reach, the La Sierra Connection and the Mockingbird Connection as evidenced on Draft SEIR/EIS Figures 4.10-4 through 4.10-6, 4.10-8 and 4.10-9, respectively, and provided in Appendix H. The Figures indicate specific sensitive receptors listed in Table 4.10-F and show via the aerial photographic base mapping, where residences are located. This analysis indicates where the 65 dBA L_{eq} is located; and the portion of **MM Noise 1** that was omitted in the comment states, "Based on the Acoustical Impact Analysis which shows that the 65 dBA L_{eq} is slightly less than one-quarter mile from the pipeline alignment, . . ." The same one-quarter mile distance would be applied to the alternative street(s) and mitigation required in **MM Noise 1** would be implemented. In addition, construction and detours will be temporary. The Project construction will likely simply detour traffic around the immediate construction site where pipe is being laid on any given day within the same street, but if traffic needed to be detoured to another street, that need would be identified in the *Traffic Control and Safety Plan* prior to construction, which the City will have the opportunity to review and approve through the encroachment permit process. Therefore, because detailed analyses of the Project alignment within the city limits of Riverside were conducted, construction noise impacts are temporary and for this Project, will not remain in a single location for the duration of Project construction, mitigation measures **MM Noise 1** through **3** and **MM Trans 6** shall be implemented, no additional analysis is needed and impacts resulting from Project construction noise will be mitigated to less than significant levels.

Therefore, impacts from Project-related traffic noise will be less than significant and no further analysis is required. WMWD will continue to coordinate with the City of Riverside informally through the BTAC and other water-related organizations as well as through the required mitigation measures and encroachment permitting process that will be required of this Project.

No new significant impacts or information not previously addressed in the SEIR/EIS was identified by this comment. No further analysis is required.

Response to the South Coast Air Quality Management District
Letter Dated March 8, 2011

Comment 1:

The South Coast Air Quality Management District (AQMD) appreciates the opportunity to comment on the above-mentioned document. The following comment is intended to provide guidance to the lead agency and should be incorporated into the final Environmental Impact Report (EIR) as appropriate.

Based on a review of the draft EIR the AQMD staff is concerned about the significant construction-related air quality impacts from the proposed project. In order to reduce regional air quality impacts, AQMD staff recommends that the lead agency require additional mitigation to reduce diesel equipment exhaust emissions during construction activities.

Pursuant to Public Resources Code Section 21092.5, please provide the AQMD with written responses to all comments contained herein prior to the adoption of the final EIR. Further, staff is available to work with the lead agency to address these issues and any other questions that may arise. Please contact Dan Garcia, Air Quality Specialist CEQA Section, at (909) 396-3304, if you have any questions regarding the enclosed comments.

Response to Comment 1:

As stated on page 4.2-17 of the SEIR/EIS, the "2005 PEIR found that impacts related to short-term construction of the project would result in significant impacts… Long-term impacts from project operation were found to be less than significant…" and on page 4.2-25, it states that "the 2005 Project Alignment would contribute to a cumulatively considerable short-term impact during construction due to the scale of the 2005 Project Alignment (length, pipe sizes, and necessary construction techniques), even with the implementation of mitigation measures (listed on page 4.2-27), and a Statement of Overriding Considerations was adopted for significant air quality impacts."

Evaluation of the Project Realignment Alternatives also shows that the estimated maximum daily construction emissions (Table 4.2-Q on page 4.2-50) will exceed South Coast Air Quality Management District ("SCAQMD") regional thresholds for construction. SCAQMD Localized significance thresholds for construction will also be exceeded. However, operation of the Project will not exceed SCAQMD operational thresholds.

The Project Realignment Alternative does not change the significance finding of the Certified 2005 PEIR.

Nevertheless, mitigation measures **MM Air 1** through **MM Air 4a** (SEIR/EIS, pp. 4.2-65 to 66) and **MM Energy 1** (SEIR/EIS, p. 4.5-12), are required to lessen the impacts from construction-related emissions. (See also **Response to Comments 2** through **6** on pages 2-76 to 2-89.)

The Western Municipal Water District ("WMWD") will provide a written proposed response to SCAQMD no less than 10 days prior to the public hearing regarding the proposed project and Environmental Impact Report No. 450, which complies with the provisions set forth in Public Resources Code Section 21092.5 which states that: "At least 10 days prior to certifying an environmental impact report, the lead agency shall provide a written proposed response to a public agency on comments made by that agency which conform with the requirements of this division."

No new significant impacts or information not previously addressed in the SEIR/EIS was identified by this comment. No further analysis is required.

Comment 2:

Construction Mitigation Measures

1. Given that the lead agency's regional and localized construction air quality analysis demonstrates that the criteria pollutant emissions will exceed the AQMD's daily significance thresholds for NOX, PM10 and PM2.5 for each of the proposed project alternatives the lead agency should consider adding the following mitigation measures to further reduce air quality impacts from the project, if feasible:

    - Configure construction parking to minimize traffic interference,
    - Provide dedicated turn lanes for movement of construction trucks and equipment on- and off-site,
    - Reroute construction trucks away from sensitive receptor areas,
    - Improve traffic flow by signal synchronization,
    - Ensure that all vehicles and equipment will be properly tuned and maintained according to manufacturers' specifications,

Response to Comment 2:

The air quality and traffic mitigation measures included in the Draft SEIR/EIS, address air quality construction emissions in many ways including some of those suggested within this comment. Mitigation measure **MM Air 1** (Draft SEIR/EIS, p. 4.2-65) requires "prior to construction of the proposed improvements, the project proponent will provide a traffic control plan that will describe in detail safe detours around the project construction sites and provide temporary traffic control (i.e., flag person) during earthen material transport and other construction-related truck hauling activities;" this will keep construction and other traffic moving as freely as possible during construction. In addition, **MM Trans 2** and **2a** (Draft SEIR/EIS, p. 4.12-37-38) require Traffic Control and Safety Plans which will *minimize traffic interference due to construction.* Mitigation measure **MM Trans 2a** includes specific traffic control strategies which will reduce traffic interruptions in general including *"temporary signal phasing modifications"* which were recommended by AQMD. In addition, the following items shall be added to **MM Trans 2a**, as recommended, to further reduce air quality impacts during construction:

> **MM Trans 2a:** (TRAF-1 through TRAF 3 and TRAF-6): Based on the Traffic Impact Study Report and Traffic Impact Study Report Addendum prepared for the project, it is concluded that the traffic impacts generated from the installation of the pipeline will require implementation of mitigation which may include non-peak hour construction (AM peak hours are 7:00 a.m. to 9:00 a.m., PM peak hours are 4:00 p.m. to 6:00 p.m.), temporary lane closures, temporary lane shifts using channelizing devices, *temporary signal phasing modifications*, and detours to divert traffic through nearby streets. A Traffic Control and

Safety Plan shall be prepared for each reach of project construction. To maintain traffic flow and reduce air quality impacts, t~~T~~raffic Control and Safety Plans shall implement recommendations . . . , and shall ensure that all vehicular/pedestrian/bike connections are maintained throughout the construction period and may include, but not be limited to, such things as:

- identification of all roadway locations where special construction techniques (e.g., directional drilling or night construction) would be used to minimize impacts to traffic flow;
- circulation and detour plans to minimize impacts to local street circulation. This may include the use of signing and flagging to guide vehicles through and/or around the construction zone;
- procedures to limit lane closures during peak hours to the extent possible;
- haul routes that would minimize truck traffic on local roadways to the extent possible;
- detours for bicycles and pedestrians in all areas potentially affected by project construction;
- procedures ensuring that open trenches subject to vehicular or pedestrian traffic would be covered at the end of each workday with metal plates capable of accommodating traffic;
- the installation of traffic control devices as specified in the California Manual on Uniform Traffic Control Devices;
- the installation of safety fencing, where needed, to protect pedestrians from construction areas;
- applicable railroad safety and engineering guidelines that would be adhered to when installing pipeline within a railroad right-of-way, and by which all construction crews and project personnel would be trained on applicable railroad safety guidelines prior to commencing work within the railroad right-of-way;
- procedures by which construction vehicles and equipment would not cross the tracks except at established public crossings or as specified by the applicable railroad company;
- developed access plans to be implemented for highly sensitive land uses such as police and fire stations, transit stations, hospitals, and schools. The access plans would be developed with the facility owner or administrator. To minimize disruption of emergency vehicle access, affected jurisdictions shall be asked to identify detours for emergency vehicles, which will then be posted by the contractor. The facility owner or operator shall be notified in advance of the timing, location, and duration of construction activities and the locations of detours and lane closures;
- procedures to store construction materials only in designated areas;
- coordination with local transit agencies for temporary relocation of routes or bus stops in work zones, as necessary; ~~and~~
- plans to restore all roads disturbed during project construction to their preconstruction condition, pursuant to franchise agreements with an applicable jurisdiction;~~.~~
- provide dedicated turn lanes for movement of construction trucks and equipment on and off site; and
- reroute construction trucks away from sensitive receptor areas.

Construction parking areas (both employee parking and equipment staging) are required to be identified and submitted for review and approval to each local jurisdiction within which each phase of construction occurs pursuant to mitigation measure **MM Trans 7**. To assure that traffic interference and therefore, air quality impacts, are minimized, **MM Trans 7** (Draft SEIR/EIS, p. 4.12-39) shall be modified as follows:

MM Trans 7: WMWD shall submit the location of proposed staging area(s) to appropriate local jurisdictions for review and approval. WMWD shall state the size of the area, the purpose (e.g., storage of construction equipment and employee parking), the number of vehicles and pieces of equipments to be stored, and the duration (in number of days and number of hours per day) that each staging area will be used. Such areas shall be configured to minimize traffic interference.

Mitigation measure **MM Air 3** (Draft SEIR/EIS, p. 4.2-65) already requires maintenance of all vehicles and equipment, as recommended in this comment; no changes are required.

No new significant impacts or information not previously addressed in the SEIR/EIS was identified by this comment. No further analysis is required.

Comment 3:

- Consistent with measures that other lead agencies in the region (including Port of Los Angeles and Port of Long Beach) have enacted, require all on-site construction equipment to meet EPA Tier 2 or higher emissions standards according to the following:
  - ✓ April 1, 2010, to December 31, 2011: All offroad diesel-powered construction equipment greater than 50 hp shall meet Tier 2 offroad emissions standards. In addition, all construction equipment shall be outfitted with the BACT devices certified by CARB. Any emissions control device used by the contractor shall achieve emissions reductions that are no less than what could be achieved by a Level 2 or Level 3 diesel emissions control strategy for a similarly sized engine as defined by CARB regulations.
  - ✓ January 1, 2012, to December 31, 2014: All offroad diesel-powered construction equipment greater than 50 hp shall meet Tier 3 offroad emissions standards. In addition, all construction equipment shall be outfitted with BACT devices certified by CARB. Any emissions control device used by the contractor shall achieve emissions reductions that are no less than what could be achieved by a Level 3 diesel emissions control strategy for a similarly sized engine as defined by CARB regulations.
  - ✓ Post-January 1, 2015: All offroad diesel-powered construction equipment greater than 50 hp shall meet the Tier 4 emission standards, where available. In addition, all construction equipment shall be outfitted with BACT devices certified by CARB. Any emissions control device used by the contractor shall achieve emissions reductions that are no less than what could be achieved by a Level 3 diesel emissions control strategy for a similarly sized engine as defined by CARB regulations.
  - ✓ A copy of each unit's certified tier specification, BACT documentation, and CARB or AQMD operating permit shall be provided at the time of mobilization of each applicable unit of equipment.

Response to Comment 3:

WMWD has reviewed the recommended mitigation measure in **Comment 3** to require all off-road diesel construction equipment to meet Tier 4 emissions standards after January 1, 2015. "Tier" compliance regulates the emissions from new engines produced by manufacturers and is related to fleet compliance; however, fleet compliance per CARB regulations (i.e., the In-Use Off-Road Diesel Vehicle Regulation) does not mandate that every vehicle in a fleet over 25 horsepower (hp) be Tier 4 for a contractor to be compliant. Thus, current fleets can be composed of some older and some new equipment and still be compliant. Interim Tier 4 standards are now in effect and final Tier 4 standards will not be required of manufacturers until January 1, 2014. The above-suggested time table would only allow a year after such engines are required to be manufactured for an entire fleet to be turned over and be ready to be used on this Project's construction. Furthermore, as stated on CARB's website http://www.arb.ca.gov/enf/advs/advs414.pdf, due to the economy and lack of authorization from the U.S. E.P.A., enforcement of in-use off-road diesel regulation is delayed until further notice. During this enforcement delay, fleets will not be retroactively cited for noncompliance. Thus, without enforcement as an incentive, contractors may not be as aggressive with compliance. Because contractor compliance is applicable to fleets and enforcement is not currently in place, few if any construction firms may be equipped with fleets that are minimally compliant with the CARB regulation, let alone 100 percent Tier 4 equipment within the recommended timeframe. For later phases of the Project, Tier 4 equipment will likely be readily available within contractors' fleets, but WMWD is concerned that requiring such standards so early would limit those companies able to bid on Phase 1 of the Project, which would either delay construction, or add unnecessary costs to the Project, which is being built with public funds.

As identified in **Comment 5**, below, SCAQMD offers the Surplus Off-Road Opt-In for NO_X (SOON) Program which provides funding assistance to applicable fleets for the purchase of commercially-available low-emission heavy-duty engines to achieve reductions in NO_X from in-use off-road diesel vehicles. Encouraging contractors to participate in this program is recommended and could allow contractors who do not have fully compliant fleets to bid and to comply earlier.

Therefore, the following mitigation measure will be added to the Final SEIR/EIS to further reduce construction equipment emissions, especially NO_X and PM:

> **MM Air 7:** To reduce construction vehicle emissions, the bid specification packages for individual Project construction phases shall require the bidding company's fleet of off-road diesel-powered construction equipment greater than 25 hp to meet Tier 3 off-road emissions standards or better. Any emissions control device used by the contractor shall achieve Level 3 emissions reductions of no less than 85 percent for particulate matter, as specified by CARB regulations. The bidding company shall also provide certification that their fleet is in compliance with CARB's In-Use Off-Road Diesel Vehicle Regulation in effect at that time, or proof that the bidding company has applied to the SCAQMD SOON Program (and/or other applicable grant programs) to acquire funding assistance to bring it into compliance. During the bid process, proof of compliance shall be provided to WMWD, which shall include but is not limited to, CARB and/or SCAQMD operating permit(s), and other documentation such as a copy of each unit's certified tier specification, BACT documentation, and/or other compliance documentation.

Comment 4:

- For additional measures to reduce off-road construction equipment, refer to the mitigation measure tables located at the following website www.aqmd.gov/ceqa/handbook/mitigation/MM_intro.html.

Response to Comment 4:

Mitigation measures available at the website mentioned in **Comment 4** are shown in the tables below.

Ref. #	Source Activity	Mitigation Measure[26]	PM10 Control Efficiency	Comments	Estimated Cost[27]
A	Active demolition and debris removal	Apply water every 4 hours to the area within 100 feet of a structure being demolished, to reduce vehicle trackout.	36%		ND
B	Trackout	Use a gravel apron, 25 feet long by road width, to reduce mud/dirt trackout from unpaved truck exit routes.	46%		$1,360/year (gravel apron dimensions: 50' x 30' x 3" thick)
C1	Post-demolition stabilization	Apply dust suppressants (e.g., polymer emulsion) to disturbed areas upon completion of demolition.	84%	For actively disturbed areas.	$5,340/acre-year (Useful life of 1 year)
C2	Windblown dust from inactive areas[28]	Apply chemical soil stabilizers on inactive construction areas (disturbed lands within construction projects that are unused for at least four consecutive days).	Up to 80%	Wind erosion from inactive areas.	ND
D	Demolition Activities	Apply water to disturbed soils after demolition is completed or at the end of each day of cleanup.	10%	14-hour watering interval.	$68–81/acre-day
E	Demolition Activities	Prohibit demolition activities when wind speeds exceed 25 mph.	98%	Estimated for high wind days in absence of soil	$1.36 per 8 hour day idled

[26]Unless otherwise noted, information presented in this table is from the following reference: *WRAP Fugitive Dust Handbook*, September 7, 2006 (http://www.wrapair.org/forums/dejf/fdh/content/FDHandbook_Rev_06.pdf). ND = No Data.
[27]2003 dollars.
[28]Reference: U.S. EPA, "AP-42, Vol. I." Pg. 11.2.4-1 (http://www.epa.gov/ttn/chief/old/ap42/4th_edition/ap42_4thed_withsuppsa_f.pdf).

Ref. #	Source Activity	Mitigation Measure[26]	PM10 Control Efficiency	Comments	Estimated Cost[27]
				disturbance activities. Demolition of 1,000 ft^2 structure on 1.2 acres.	
F	Construction Activities	Apply water every 3 hours to disturbed areas within a construction site.	61%	3.2-hour watering interval.	ND
G	Scraper loading and unloading	Require minimum soil moisture of 12% for earthmoving by use of a moveable sprinkler system or a water truck. Moisture content can be verified by lab sample or moisture probe.	69%	AP-42 emission factor equation for materials handling due to increasing soil moisture from 1.4% to 12%.	$138/acre (sprinkler system to maintain minimum soil moisture of 12%)
H	Construction traffic	Limit on-site vehicle speeds (on unpaved roads) to 15 mph by radar enforcement.	57%	Assume linear relationship between PM10 emissions and uncontrolled vehicle speed of 35 mph.	$22/inspection $180/sign
	Source Component	Mitigation Measure[29]	PM10 Control Efficiency	References & Assumptions	Estimated Cost[30]
I	Grading	Replace ground cover in disturbed areas as quickly as possible.	5%[31]	EPA, "Control of Fugitive Dust Sources" EPA-450/3-88-008, September 1988	ND
J	Grading	All trucks hauling dirt, sand, soil, or other loose materials are to be tarped with a fabric	91%	Arizona Department of Transportation	ND

[29]Unless otherwise noted, information presented in this table is from the following reference: *WRAP Fugitive Dust Handbook*, September 7, 2006 (http://www.wrapair.org/forums/dejf/fdh/content/FDHandbook_Rev_06.pdf). ND = No Data.
[30] 2003 dollars.
[31] Higher than 5% control efficiency may be used. However, please provide the supporting analysis and data in the environmental documentation.

Ref. #	Source Activity	Mitigation Measure[26]	PM10 Control Efficiency	Comments	Estimated Cost[27]
		cover and maintain a freeboard height of 12 inches.		Construction Analysis Services, "Final Field Study Report – PM10 Control Management Study for ADOT Construction Projects, June 1994	

Some of these recommended mitigation measures do not apply to a Project of this nature. Mitigation measure A, above, is focused on the demolition of a structure which are not a part of this Project's construction process and is not applicable. Mitigation measure B, regarding trackout, has been included as mitigation for the Project and detailed below in mitigation measure **MM Air 4a**. Mitigation measures C1, C2, D, and E are not applicable to this project as demolition will not occur and disturbed areas are not anticipated to be left unused for four or more consecutive days. Control of fugitive dust is more generally/appropriately addressed through measure F for this Project and has been included /addressed on page 4.2-30 of the Draft SEIR/EIS. Mitigation D is simply another method for maintaining dust control through the application of water which is more appropriately covered for a project of this nature through recommended mitigation measure F. Suggested mitigation measure F was analyzed as part of the air quality modeling as a conservative reduction (61 percent) for dust control measures. Other recommended measures (B) are infeasible for the majority of this Project (i.e., pipeline installation); however, measure B could apply to some facilities construction sites (i.e., Mockingbird reservoir and booster station, wells or Clay Street booster station). Mitigation measure G, H, I, and J are not feasible for this project as it is a pipeline project and will not utilize scrapers; the project is generally linear and will not have unpaved on-site roads on which to limit speeds; and as the project is mostly linear, it does not include grading; and where grading occurs, the project will comply with SCAQMD Rule 403.

The requirements of Rule 403 and the SEIR/EIS address the majority of the subject matter within this table on page 4.2-30 where it states:

> The project will be required to comply with existing SCAQMD rules for the reduction of fugitive dust emissions. SCAQMD Rule 403 establishes these procedures. They include the application of water or chemical stabilizers to disturbed soils at least twice a day (C and F), covering all haul vehicles before transport of materials (J), restricting vehicle speeds on unpaved roads to 15 mph (H), and sweeping loose dirt from paved site access roadways used by construction vehicles. In addition, it is required to establish a vegetative ground cover on disturbance areas that are inactive within 30 days after active operations have ceased (I). Alternatively, an application of dust suppressants can be applied in sufficient quantity and frequency to maintain a stable surface (C). Rule 403 also requires grading and excavation activities to cease when winds exceed 25 mph (E).

Furthermore, **MM Air 4a** on page 4.2-65 states the following and already addresses specifically recommended mitigation measures C1, C2, J, and E:

> To reduce fugitive dust emissions, *the contractor shall provide WMWD with sufficient proof of compliance with Rule 403 and other dust control measures including, but not limited to:*

- requiring the application of non-toxic soil stabilizers according to manufacturers' specifications to all inactive construction areas (previously graded areas inactive for 20 days or more, assuming no rain);
- requiring all trucks hauling dirt, sand, soil, or other loose materials are to be covered or must maintain at least 2 feet of freeboard (i.e., minimum vertical distance between top of the load and the top of the trailer), in accordance with Section 23114 of the California Vehicle Code;
- suspending all excavating and grading operations when wind gusts (as instantaneous gust) exceed 25 miles per hour over a 30-minute period;
- post contact information outside the property for the public to call if specific air quality issues arise;
- use SCAQMD Rule 1186 and 1186.1 certified street sweepers or roadway washing trucks when sweeping streets to remove visible soil materials, replace ground cover in disturbed areas as quickly as possible.

MM Air 4a shall be updated to include:

- Install gravel bed trackout apron (3 inches deep, 25 feet long, 12 feet wide per lane and edged by rock berm or row of stakes) to reduce mud/dirt trackout from unpaved truck exit routes where appropriate (i.e., Mockingbird reservoir and booster station, Clay Street booster station).

Project is incorporating fugitive dust-control measures on par with those recommended by SCAQMD. No new significant impacts or information not previously addressed in the SEIR/EIS was identified by this comment. No further analysis is required.

SCAQMD also recommends the following from their website:

Source Activity	Mitigation Measure[32]	PM10 Control Efficiency	Comments	Estimated Cost[33]
Conveyors	Continuous water spray at conveyor transfer point	62%	The control efficiency achieved by increasing the moisture content of the material from 1% to 2% is calculated utilizing the AP-42 emission factor equation for materials handling which contains a correction term for	ND

[32]Unless otherwise noted, information presented in this table is from the following reference: *WRAP Fugitive Dust Handbook*, September 7, 2006 (http://www.wrapair.org/forums/dejf/fdh/content/FDHandbook_Rev_06.pdf). ND = No Data.
[33]2003 dollars.

Source Activity	Mitigation Measure[32]	PM10 Control Efficiency	Comments	Estimated Cost[33]
			moisture content.	
Storage piles	Require construction of 3-sided enclosures with 50% porosity for storage pile.	75%	Determined through modeling of open area windblown emissions with 50% reduction in wind speed and assuming no emission reduction when winds approach open side.	$109/year (useful life of 15 years; pile volume = 5 yd^3)
Storage piles	Water the storage pile by hand at a rate of 1.4 gallons/hour-$yard^2$, or apply cover when wind events are declared.	90%		ND
Storage pile wind erosion	Require construction of 3-sided enclosures with 50% porosity.	75%	Determined through modeling of open area windblown emissions with 50% reduction in wind speed and assuming no emission reduction when winds approach open side	$109/year (Useful life of 15 years; pile volume = 5 yd3)
Storage pile wind erosion	Water the storage pile by hand or apply cover when wind events are declared.	90%		$22/day (100 cubic yard pile)

The project will not use any conveyors but "surface disturbance will include stockpiles of spoils, spoil removal activities, and equipment and materials storage. Ancillary equipment required of the operation includes an electric motor powered hydraulic pumps, an articulating crane, electric generator sets, a front end loader, and haul trucks to remove the spoils. Work crews connected with boring operation typically work 24-hours a day until the boring operation is completed. Removal of the spoils can be limited to daylight hours provided there is room on-site to stockpile the spoils." (Draft SEIR/EIS, p. 4.2-18)

Stockpiles will be temporary as described above and spoils will be removed and transported around the clock when and where permitted. In areas where 24-hour transport would be limited, actively stockpiled dirt could be subject to wind erosion. However, WMWD's standard construction procedures provide for minimization of erosion (both wind and water) through implementation of storm water pollution prevention plans (SWPPP) under the National Pollutant Elimination System (NPDES) General Permit for construction-period storm water discharges. The proposed Project is subject to the permit requirements and mitigation measure **MM Water Qual 1 (HYD-1)** requires this and will be amended as follows to specifically identify wind erosion of stockpiled areas. Therefore, construction activities will not result in substantial soil erosion or the loss of topsoil. (Draft SEIR/EIS, p. 4.11-12 and Appendix A, p. 22) Furthermore, fugitive dust emissions from the stockpile will be minimized through BMPs.

MM Water Qual 1 (HYD-1): WMWD shall require contractors to implement a program of best management practices (BMPs) and best available technologies to reduce potential impacts to water quality that may result from construction activities. To reduce or eliminate construction-related water quality impacts before the onset of construction activities, the construction agent(s) shall obtain coverage under the National Pollutant Discharge Elimination System (NPDES) General construction permit. Construction activities shall comply with the conditions of this permit that include preparation of a storm water pollution prevention plan (SWPPP), implementation of BMPs, and monitoring to ensure impacts to water quality are minimized. As part of this process, multiple BMPs shall be implemented to provide effective erosion and sediment control. These BMPs shall be selected to achieve maximum sediment removal and represent the best available technology that is economically achievable. BMPs to be implemented as part of this mitigation measure shall include, but are not limited to, the following:

a. Temporary erosion control measures such as silt fences, staked straw bales/wattles, silt/sediment basins and traps, check dams, geofabric, sandbag dikes, and temporary revegetation or other groundcover would be employed for disturbed areas <u>to avoid water erosion</u>. <u>Stockpiled dirt could be covered, misted continuously, protected with three-sided temporary wind breaks or other means to avoid wind erosion.</u>

b. Storm drain inlets on the site and in downstream offsite areas shall be protected from sediment with the use of BMP's acceptable to the construction agent(s), local jurisdictions and the California Regional Water Quality Control Board, Santa Ana Region.

c. Dirt and debris shall be swept from paved streets in the construction zone on a regular basis, particularly before predicted rainfall events.

d. No disturbed surfaces shall be left without <u>wind and water</u> erosion control measures in place between October 15 and April 15<u>, and when winds exceed 25 MPH</u>. The construction agent(s) shall file a Notice of Intent with the Regional Board and require the preparation of a SWPPP prior to commencement of construction. The construction agent(s) shall routinely inspect the construction site to verify that the BMP's specified in the SWPPP are properly installed and maintained. The construction agent shall immediately notify the contractor if there were a noncompliance issue and require immediate compliance. . .

No new significant impacts or information not previously addressed in the SEIR/EIS was identified by this comment. No further analysis is required.

SCAQMD also recommends the following from their website:

Source Activity	Mitigation Measure[34]	PM10 Control Efficiency	Comments	Estimated Cost[35]
Travel over unpaved roads	Limit maximum speed on unpaved roads to 25 miles per hour.	44%	Assumes linear relationship between PM10 emissions and vehicle speed and an uncontrolled speed of 45 mph.	ND
Travel over unpaved roads	Pave unpaved roads and unpaved parking areas.	99%	Based on comparison of paved road and unpaved road PM10 emission factors.	$44,100/mile-year (useful life of 25 years)
Travel over unpaved roads	Implement watering twice a day for industrial unpaved road.	55%		ND
Travel over unpaved roads	Apply chemical dust suppressant annually to unpaved parking areas.	84%		$5,340/acre-year (useful life of 1 year)

The above recommended measures related to unpaved roads do not apply to the Project which is being constructed within paved roads or immediately adjacent to existing paved roadways and will not have stretches of unpaved roads. In addition, the project will comply with Rule 403, which includes "the application of water or chemical stabilizers to disturbed soils at least twice a day, covering all haul vehicles before transport of materials, restricting vehicle speeds on unpaved roads to 15 mph, and sweeping loose dirt from paved site access roadways used by construction vehicles" (Draft SEIR/EIS, p. 4.2-30). Therefore, further mitigation is neither warranted, nor required.

[34]Unless otherwise noted, information presented in this table is from the following reference: *WRAP Fugitive Dust Handbook*, September 7, 2006 (http://www.wrapair.org/forums/dejf/fdh/content/FDHandbook_Rev_06.pdf). ND = No Data.
[35]2003 dollars.

SCAQMD recommends the following from their website:

Ref. #	Source Activity	Mitigation Measure[36]	PM10 Control Efficiency	Comments	Estimated Cost[37]
K	Windblown dust from disturbed areas[38]	Plant tree windbreaks on the windward perimeter of construction projects if adjacent to open land.	4% (15% for mature trees)		ND
L	Windblown dust from disturbed areas[4]	Plant vegetative ground cover in disturbed areas as soon as possible.	15%		ND

Mitigation measure **MM Trans 12 (TRAF-7)** requires the restoration of public streets (including landscaping), sidewalks, bikeways, etc., to "their pre-construction condition, following completion of each individual construction project" within the overall Project. Thus, all disturbed areas that are disturbed during construction will either be vegetated or repaved so recommended measure L is not necessary. Measure K is not applicable to this project, as tree windbreaks dense enough to serve this function would not be appropriate within the street rights of way in urbanized areas where construction is occurring. As stated previously, the project will comply with Rule 403 and **MM Air 4a**.

Therefore, mitigation measures recommended by SCAQMD are either: not applicable to the Project, infeasible, or similar to SCAQMD recommended mitigation measures for minimization of fugitive dust emissions and already addressed in the SEIR/EIS and included as required mitigation for the Project, or have been included as mitigation for the Project.

To be conservative and as recommended by SCAQMD, other than the reduction utilized in URBEMIS which states "the following mitigation measures apply to Phase: Mass Grading 1/1/2010 - 1/31/2010 - Default Mass Site Grading/Excavation Description For Soil Stabilizing Measures, the Water exposed surfaces 3x daily watering mitigation reduces emissions by: PM10: 61% PM25: 61%," no other reductions in construction emissions were quantified.

Although mitigation measures **MM Air 1** through **MM Air 7, MM Water Qual 1**, and **MM Trans 2, 2a, 7** and **12** will further reduce emissions of NO_X and PM (together with other criteria pollutants and CO_2), as stated previously, the Project Realignment Alternative does not change the significance finding of the Certified 2005 PEIR. Therefore, as disclosed on pages 4.2-66 and 67 of the SEIR/EIS, "the air quality impacts from construction of the Realignment Alternatives are considered regionally and locally significant" and have the potential to generate CO_2 emissions which may have a significant cumulative impact on the environment.

No new significant impacts or information not previously addressed in the SEIR/EIS was identified by this comment. No further analysis is required.

[36]Unless otherwise noted, information presented in this table is from the following reference: *WRAP Fugitive Dust Handbook*, September 7, 2006 (http://www.wrapair.org/forums/dejf/fdh/content/FDHandbook_Rev_06.pdf). ND = No Data.
[37]2003 dollars.
[38]Reference: SCAQMD, *SIP for PM10 in the Coachella Valley*, 1990, Pg 5-15.

Comment 5:

- The lead agency should consider encouraging construction contractors to apply for AQMD "SOON" funds. As an example, incentives could be provided in the bidding process for those construction contractors who apply for AQMD "SOON" funds. More information on this program can be found at the following website: http://www.aqmd.gov/tao/Implementation/SOONProgram.htm

No new significant impacts or information not previously addressed in the SEIR/EIS was identified by this comment. No further analysis is required.

Response to Comment 5:
As discussed in **Response to Comment 3**, mitigation measure **MM Air 7** will be added to the Final SEIR/EIS to further reduce construction equipment emissions, especially NO_X and PM. See **Response to Comment 3**, above.

Comment 6:

In addition to the mitigation measures, AQMD staff recommends modifying the existing mitigation measures as follows:

- **MM Air 2:** During construction of the proposed improvements require the use of electricity from power poles rather than temporary diesel or gasoline power generators ~~one of the following options must be used to supply the power needs for boring/tunneling operations: 1) use natural gas fueled generator sets; 2) use low emission, duel fueled generator sets; or 3) prior to construction of the proposed improvements, arrangements will be made with Southern California Edison to provide temporary construction power at the boring/tunneling sites (67 % reduction):~~.

Response to Comment 6:
Modifications to **MM Air 2** cannot be made exactly as SCAQMD requested above due to the fact that it is not guaranteed that there will be access to power poles at each construction site location. Mitigation measure **MM Air 2** will be revised in Section 4.2 of the SEIR/EIS as follows:

MM Air 2: ~~During construction of the proposed improvements one of the following options must be used to supply the power needs for boring/tunneling operations:~~ Prior to construction of the proposed improvements, arrangements will be made with Southern California Edison to facilitate the use of electricity from power poles as a primary source of power for stationary construction equipment, unless construction is occurring at locations where power poles are not available. If access to power poles is not available, the following options must be used to supply the power needs for construction: 1) use natural gas fueled generator sets; 2) use low emission, duel fueled generator sets; or 3) other low-emission power sources/supplies as appropriate and feasible. ~~prior to construction of the proposed improvements, arrangements will be made with Southern California Edison to provide temporary construction power at the boring/tunneling sites (67 percent reduction)~~

No new significant impacts or information not previously addressed in the SEIR/EIS was identified by this comment. No further analysis is required.

Response to the Department of Public Works,
County of San Bernardino
Letter Dated March 29, 2011

Comment 1:

Water Resources Division (Mike Fox, P.E., (909) 387-8213):

1. We have reviewed the Notice and it appears that the drainage concerns have been adequately identified.
2. We recommend that the proposed pipeline be constructed in a manner not to alter the direction, elevation or capacity of any existing drainage facility, and that the line be placed below any drainage course scour depths.
3. It is assumed that the cities will establish adequate provisions for intercepting and conducting the accumulated drainage around and/or through the site areas in a manner which will not adversely affect properties adjacent to or downstream of the project areas.
4. The project should incorporate the most recent FEMA regulations for development in a floodplain and/or the Regulatory Floodway. These regulations should be enforced by the local agencies.
5. Prior to any encroachment on San Bernardino County Flood Control District (District) right-of-way, a permit shall be obtained from the District's Flood Control Operations Division, Permit Section. Other off-site or on-site improvements may be required which cannot be determined at this time.
6. U.S. Army Corps of Engineers' approval may also be required for work near the Santa Ana River. Information regarding the item can be obtained from the District's Flood Control Operations Division, Permit Section.

Response to Comment 1:

1. Comment noted. WMWD and the U.S. Bureau of Reclamation appreciate the County's comments and input. No further response is required.
2. Standard engineering design practices, state Department of Public Health, and WMWD standard specifications require design of potable water pipeline facilities in such a fashion as to avoid other underground facilities through such things as separation, reinforcement, depth and alignment. Mitigation measure **MM Trans 3** will be modified in the Final SEIR/EIS to include coordination for underground facilities, as follows:

   MM Trans 3: Prior to the commencement of each individual construction project, WMWD and its contractor shall consult with the affected local jurisdiction(s) in order to coordinate project construction with applicable Capital Improvement Projects, underground facilities and/or other known potential items needing to be taken into account during final design, plan specifications and/or construction so that issues can be avoided and/or remedies included in the specifications that meet with each jurisdiction's requirements.

3. The majority of the Project is located underground, but for above-ground facilities, both WMWD and the local jurisdiction within which a facility is located require structures to be drained properly per local and state code requirements.

4. The Project's potential impacts to floodplains and/or floodways are analyzed in Section5.4.2 of the Draft SEIR/EIS. The results of the analysis are that impacts to floodplains and floodways, if they cannot be avoided (which the Project is proposed to do), are temporary, related to construction only, and pose no threat to life or property, therefore, there will be no significant impacts and no mitigation is required. (Draft SEIR/EIS, pp. 5.0-5 through 5.0-11)

5. Responsible and Cooperating Agencies from whom permits and cooperation will be required are listed on pages 2.0-10 through 2.0-12 of the Draft SEIR/EIS. The County of San Bernardino is specifically listed on page 2.0-10.

6. Comment noted. If U.S. Army Corps of Engineers' ("USACE") approval is required, information will be sought from the Permit Section, USACE and/or Riverside County Flood Control and Water Conservation District as the Preferred Alternative/Proposed Project crosses the Santa Ana River in Riverside County while the 2005 Project Alignment was proposed to cross the Santa Ana River in San Bernardino County.

Comment 2:

Traffic Planning Division (Ed Petre, P.E., (909) 387-8239):

1. The County of San Bernardino Traffic Division will require a construction management plan and a permit for any work within the County maintained road right of way.

2. 5.20b, Page 1-3 of the Addendum to the Traffic Impact Study Report, Riverside – Corona Feeder Realignment Project, states that the acceptable level of service is C. This is incorrect. The acceptable level of service in the valley unincorporated areas of the County is D. Where did the statement which states that a reduced level of service maybe accepted on a case by case basis with the four-fifths approval by the City Council come from?

Response to Comment 2:

As detailed on page 4.12-18 of the SEIR/EIS, WMWD's construction workers shall endeavor to minimize impacts to the City's motoring public through compliance with the "Work Area Traffic Control Handbook" (W.A.T.C.H. Manual) as published by Building News, Inc. and mitigation measures **MM Trans 2** and **MM Trans 2a** require the preparation and approval of Traffic Control and Safety Plans by each jurisdiction within which the Project is located. (Draft SEIR/EIS, pp. 4.12-37 and 38)

Comment noted regarding the correct level of service standard within unincorporated portions of San Bernardino County; the Draft SEIR/EIS will be corrected, as needed. The portion of the unincorporated County where the Project will be located is the "donut hole" and is referenced within the city of Redlands General Plan as well; this is from where the reference to the City Council was erroneously taken. The SEIR/EIS, Section 4.12 Traffic and Transportation, page 4.12-11 will be modified to include the following clarification:

> However, LOS D is acceptable in unincorporated portions of the county of San Bernardino pursuant to its regulations.

RESPONSE TO COMMENTS

OTHER INTERESTED PARTIES

Response to the Pechanga Cultural Resources,
Temecula Band of Luiseño Mission Indians
Letter Dated March 8, 2011

Comment 1:

This comment letter is written on behalf of the Pechanga Band of Luiseño Indians (hereinafter, "the Tribe"), a federally recognized Indian tribe and sovereign government. The Tribe formally requests, pursuant to Public Resources Code §21092.2, to be notified and involved in the entire CEQA and NEPA environmental review process for the duration of the above referenced project (the "Project"). If you have not done so already, please add the Tribe to your distribution list(s) for public notices and circulation of all documents, including environmental review documents, archeological reports, and all documents pertaining to this Project. The Tribe further requests to be directly notified of all public hearings and scheduled approvals concerning this Project. Please incorporate these comments into the record of approval for this Project as well.

The Tribe submits these comments concerning the Project's potential impacts to cultural resources in conjunction with the environmental review of the Project and to assist Western Municipal Water District (WMWD) and the US Department of the Interior Bureau of Reclamation (BOR) in preparing appropriate mitigation for the cultural resources that may be discovered during development of this Project.

According to the DSEIR/EIS there are over 200 historic and prehistoric resources identified within a one-mile radius of the APE, and there is at least one Native American cultural resource within one of the proposed Project alignments. The Tribe has previously commented that they are concerned about resources that may be identified during earthmoving activities (DPEIR comments 2004; NOP comments 2008) and continues to express our concern regarding any resources that might be impacted subsurface. Most of the existing APE was constructed many years ago without a Native American observer present and there is the possibility of cultural and archaeological resources buried under currently paved and landscaped portions of the APE.

Response to Comment 1:

WMWD will continue to maintain the Tribe on the notification/distribution list for notices and information related to the CEQA/NEPA process for the Riverside-Corona Feeder Project. No new significant impacts or information not previously addressed in the SEIR/EIS was identified by this comment. No further analysis is required.

Comment 2:

WMWD AND THE BOR MUST INCLUDE INVOLVEMENT OF AND CONSULTATION WITH THE PECHANGA TRIBE IN ITS ENVIRONMENTAL REVIEW PROCESS

It has been the intent of the Federal Government[1] and the State of California[2] that Indian tribes be consulted with regard to issues which impact cultural and spiritual resources, as well as other governmental concerns. The responsibility to consult with Indian tribes stems from the unique government-to-government relationship between the United States and Indian tribes. This arises when tribal interests are affected by the actions of governmental agencies and departments. In this case, it is undisputed that the project lies within the Pechanga Tribe's traditional territory. Therefore, in order to comply with CEQA and other applicable Federal and California law, it is imperative that WMWD and the BOR consult with the Tribe in order to guarantee an adequate basis of knowledge for an appropriate evaluation of the Project effects, as well as generating adequate mitigation measures.

Response to Comment 2:

This comment was received and responded to in the 2005 Final PEIR, certified May 2005, as follows:

> "Throughout the process of research and writing the Draft PEIR and subsequent to its distribution, Western Municipal Water District ("WMWD") has sought input, continued notification, consulted and provided information to Native American tribes. According to the Archaeological Survey Report, a Sacred Lands records search was completed through the NAHC in 2003 as a part of the Archaeological Survey Report. Letters were sent to all the tribal contacts provided by the NAHC. No tribes responded at that time. The Pechanga first responded with respect to this project to the Notice of Preparation of the Draft EIR. Again in 2004, at the urging of the NAHC, another Sacred Lands search was conducted and letters were sent to tribal representative contacts provided by NAHC in November of 2004 by Webb Associates on behalf of WMWD. The Ramona Band of Cahuilla (Ramona) and San Manuel Band of Gabrielino Indians (San Manuel) both responded with requests for onsite monitors. WMWD does not intend to allow for the destruction of significant sacred or cultural resources and is working with tribal representatives (Mr. Macarro and Ms. Miranda) to provide adequate mitigation acceptable to the Pechanga Band of Luiseño Indians. Other tribes (San Manuel and Ramona) have also requested monitors on site. WMWD has determined that funding three Native American monitors would be cost prohibitive, but understands that monitoring is needed.
>
> WMWD met with representatives of the Pechanga and their attorneys on January 19, 2005. Two other tribes were represented at this meeting, the Ramona and the San Manuel, as they had also expressed a tribal interest and on-site monitors in the area of the project. Additional information has been provided to all parties and revised mitigation measures have been prepared for their consideration (sent April 1 and 5, 2005). WMWD is working, and will continue to work with, the Pechanga and other tribes interested in the project area."

Subsequent to the completion of the above-described process, WMWD began to evaluate an alternative alignment for the Project pipeline, some additional connection facilities, and secure federal funding for the project. Thus, since the lands impacted by construction would change with the revised Project, the discussion with the tribes was halted until a revised alignment and subsequent environmental

documentation pursuant to CEQA and complete documentation pursuant to NEPA could be initiated. Pechanga was kept apprised of the process as indicated in **Comment 4**, below.

In 2005, there were no federal funds allocated to the construction of the proposed Project. However, such funds have become available and the proposed Project will be subject to the Section 106 process, federal government-to-government procedures, and is being evaluated pursuant to the National Environmental Protection Act (NEPA) process. No new significant impacts or information not previously addressed in the SEIR/EIS was identified by this comment. No further analysis is required.

Comment 3:

PECHANGA CULTURAL AFFILIATION TO PROJECT AREA

The Pechanga Tribe asserts that the portion of the Project APE south of the Santa Ana River is part of Luiseño, and therefore the Tribe's, aboriginal territory as evidenced by the existence of Luiseño place names, *tóota yixélval* (rock art, pictographs, petroglyphs), and village complexes within this area of Riverside County. This culturally sensitive area is affiliated with the Pechanga Band of Luiseño Indians because of the Tribe's cultural ties to this area as well as our history with projects within the area.

The Pechanga Tribe's knowledge of our ancestral boundaries is based on reliable information passed down to us from our elders; published academic works in the areas of anthropology, history and ethno-history; and through recorded ethnographic and linguistic accounts. Many anthropologists and historians who have presented boundaries of the Luiseño traditional territory have included the City of Riverside area in their descriptions (Drucker 1937; Heiser and Whipple 1957; Kroeber 1925; Smith and Freers 1994), and such territory descriptions correspond with what was communicated to the Pechanga people by our elders. While historic accounts and anthropological and linguistic theories are important in determining traditional Luiseño territory, the Pechanga Tribe asserts that the most critical sources of information used to define our traditional territories are our songs, creation accounts, and oral traditions.

Luiseño history originates with the creation of all things at *'éxva Teméeku*, in the present day City of Temecula, and dispersing out to all corners of creation (what is today known as Luiseño territory). It was at Temecula that the Luiseño deity *Wuyóot* lived and taught the people, and here that he became sick, finally expiring at Lake Elsinore. Many of our songs relate the tale of the people taking the dying *Wuyóot* to the many hot springs at Elsinore, where he died (DuBois 1908). He was cremated at *'éxva Teméeku*. It is the Luiseño creation account that connects Elsinore to Temecula, and thus to the Temecula people who were evicted and moved to the Pechanga Reservation, and now known as the Pechanga Band of Luiseño Mission Indians (the Pechanga Tribe). From Elsinore, the people spread out, establishing villages and marking their territories. The first people also became the mountains, plants, animals and heavenly bodies.

Many traditions and stories are passed from generation to generation by songs. One of the Luiseño songs recounts the travels of the people to Elsinore after a great flood (DuBois 1908). From here, they again spread out to the north, south, east and west. Three songs, called *Moníivol*, are songs of the places and landmarks that were destinations of the Luiseño ancestors, several of which are located near the Project area. They describe the exact route of the Temecula (Pechanga) people and the landmarks made by each to claim title to places in their migrations (DuBois 1908:110). Further, the story of *Táakwish* and *Tukupar* includes place names for events from the Idyllwild area to the Glen Ivy/Corona area (Kroeber 1906), which covers the southern portion of the Project area. In addition, Pechanga elders state that the Temecula/Pechanga people had usage/gathering rights to an area extending from Rawson Canyon on the east, over to Lake Mathews on the northwest, down Temescal Canyon to Temecula, eastward to Aguanga, and then along the crest of the Cahuilla range back to Rawson Canyon. The Project area is located within the northeast area of this culturally affiliated territory. The Native American Heritage Commission (NAHC) Most Likely Descendent (MLD) files substantiate this habitation and migration record from oral tradition. These examples illustrate a direct correlation between the oral tradition and the physical place; proving the importance of songs and stories as a valid source of information outside of the published anthropological data.

Tóota yixélval (rock art) is also an important element in the determination of Luiseño territorial boundaries. *Tóota yixélval* can consist of petroglyphs (incised) elements, or pictographs (painted) elements. The science of archaeology tells us that places can be described through these elements. Riverside and Northern San Diego Counties are home to red-pigmented pictograph panels. Archaeologists have adopted the name for these pictograph-versions, as defined by Ken Hedges of the Museum of Man, as the San Luis Rey style. The San Luis Rey style incorporates elements which include chevrons, zig-zags, dot patterns, sunbursts, handprints, net/chain, anthropomorphic (human-like) and zoomorphic (animal-like) designs. Tribal historians and photographs inform us that some design elements are reminiscent of Luiseño ground paintings. A few of these design elements, particularly the flower motifs, the net/chain and zig-zags, were sometimes depicted in Luiseño basket designs and can be observed in remaining baskets and textiles today.

An additional type of *tóota yixélval*, identified by archaeologists also as rock art or petroglyphs, are cupules. Throughout Luiseño territory, there are certain types of large boulders, taking the shape of mushrooms or waves, which contain numerous small pecked and ground indentations, or cupules. Many of these cupule boulders have been identified within a few miles of the Project. Additionally, according to historian Constance DuBois:

> When the people scattered from Ekvo Temeko, Temecula, they were very powerful. When they got to a place, they would sing a song to make water come there, and would call that place theirs; or they would scoop out a hollow in a rock with their hands to have that for their mark as a claim upon the land. The different parties of people had their own marks. For instance, Albañas's ancestors had theirs, and Lucario's people had theirs, and their own songs of Munival to tell how they traveled from Temecula, of the spots where they stopped and about the different places they claimed (1908:158).

Additionally, there are several Luiseño place names that have been recorded within the vicinity the Riverside County portion of the Feeder alignments. These are *Húlvulpa*, *Pocháppa* and *Saywaras Pachappa*. *Húlvulpa* refers to an indigenous plant gathering area and is located 200-300 yards south of the Santa Ana River, one mile due west of Mt. Rubidoux, and near Grand Ave. *Pocháppa* indicates an event location and *Saywaras Pachappa* is also a traditional gathering location identified where Central Avenue is bisected by Chicago Avenue.

Thus, our songs and stories, our indigenous place names, as well as academic works, demonstrate that the Luiseño people who occupied what we know today as the City of Riverside and unincorporated Riverside County are ancestors of the present-day Luiseño/Pechanga people, and as such, Pechanga is culturally affiliated to that geographic area. As the Tribe has previously stated in correspondence and at meetings, it is not clear that all the Tribes named in MM Cult 2 and MM Cult 2a are actually culturally affiliated to the Project Area.

The Tribe welcomes the opportunity to meet with WMWD and the BOR to further explain and provide documentation concerning our specific cultural affiliation to lands within your jurisdiction.

Response to Comment 3:

Thank you for the additional information about Luiseno territory. This expands upon the information provided by the Tribe in its 2004 comments. A map of Luiseno territory was provided to WMWD at the January 19, 2005 meeting by Mr. Macarro. The map was included in the 2005 Final PEIR so it is part of the record for this Project. WMWD does not deny that portions of the proposed Project will be constructed within Pechanga's area of tribal interest. The 2005 Draft PEIR noted that unidentified resources may be discovered and that the project was in Luiseno territory. As requested in 2004, WMWD provided the Tribe with additional information regarding the location of known resources and revised mitigation measures so that the tribal representatives can give input about mitigation approaches and which reaches of the pipeline may be most likely to encounter Native American resources. No new significant impacts or information not previously addressed in the SEIR/EIS was identified by this comment. No further analysis is required.

Comment 4:

TRIBAL INVOLVEMENT TO DATE

The Pechanga Tribe has been involved in this Project since the original NOP/IS was issued in 2003. At that time, the Tribe submitted comments and indicated its desire to participate in the Project evaluation process. In 2004, the Tribe submitted comments on the Draft Program Environmental Impact Report, and then spent the next year and a half consulting with WMWD and its consultants to try to develop the Project mitigation and methods for addressing the protection of cultural resources.

When the Final EIR was issued in 2005, it included many of the Pechanga Tribe's suggested revisions. While the final mitigation did not include all of the Pechanga Tribe's requested changes, the Tribe believed that it could continue to work with WMWD and its consultants to continue to address the preservation and protection of cultural resources which may be impacted by the Project. In 2006, the Tribe participated in WMWD's Disposition and Treatment Plan meeting. The Tribe felt that progress was made in these meetings as WMWD agreed to: confer with the interested tribes on the selection of any archaeological monitors used during the Project; consult with the Native American Heritage Commission for determining which tribe was the appropriate tribe to enter into a Treatment and Monitoring Agreement for each Reach of the Project; and to enter into Treatment and Monitoring Agreements with each appropriate tribe.

The Tribe further submitted comments in 2008 on WMWD's Notice of Preparation (NOP) for the Draft Supplemental Program Environmental Impact Report. The Tribe expressed concerns that the current progress on the mitigation measures be continued to the Final SEIR and that the Tribe continue to be included in the archaeological assessments and in developing any new mitigation for the Project. Contrary to these requests, the Tribe was not invited to participate in any of the updated archaeological studies conducted prior to the report completions in 2009. The Tribe was, however, contacted by the archaeological consultants requesting additional information for the new Realignment Alternatives (Clay St, La Sierra and Mockingbird Canyon) and the updated study (SRI 2009).

PROJECT IMPACTS TO CULTURAL RESOURCES

The proposed Project is on land that is within the traditional territory of the Pechanga Band of Luiseño Indians. The Pechanga Band is not opposed to this Project. The Tribe's primary concerns stem from the Project's potential impacts to Native American cultural resources. The Tribe is concerned about both the protection of unique and irreplaceable cultural resources, such as Luiseño village sites, sacred sites and archaeological items which would be displaced by ground disturbing work on the Project, and on the proper and lawful treatment of cultural items, Native American human remains and sacred items likely to be discovered in the course of the work.

Response to Comment 4:

The description of the Tribe's involvement in this project is correct according to WMWD's records.

The last paragraph of this comment was received and responded to in the 2005 Final PEIR, certified May 2005, as follows:

> "WMWD does not intend to allow for the destruction of unique or irreplaceable cultural resources and is working with the tribal representatives to provide adequate mitigation acceptable to all. It is also common and appropriate that the locations of Native American and other archaeological resources are not disclosed in public documents to help reduce vandalism and increase the likelihood that resources can be protected in place. No new information was provided or issues raised by this comment that were not previously analyzed in the Draft PEIR."

Comment 5:

The Tribe is in receipt of the January 2011 Draft Supplemental Environmental Impact Report/Environmental Impact Statement (DSEIR/EIS) and archaeological appendices. The southern portion of the proposed Project and the Alternatives are located in a sensitive region of Luiseño territory and the Tribe believes that the possibility for recovering subsurface resources during ground-disturbing activities is high. The Tribe has over thirty-five (35) years of experience in working with various types of construction projects throughout its territory. The combination of this knowledge and experience, along with the knowledge of the culturally-sensitive areas and oral tradition, is what the Tribe relies on to make fairly accurate predictions regarding the likelihood of subsurface resources in a particular location.

The Pechanga Tribe's knowledge of the continuous occupation of the Luiseño people in this geographical area for thousands of years, through their stories and songs, are cultural evidence that subsurface sites may exist in this Project area. The Tribe has expressed concern in the past that cultural resources may be unearthed during construction for the Project. The majority of the roads and landscaped areas were not monitored by an archaeologist or a Native America monitor during their initial construction and thus the extent of subsurface resources within the construction areas is unknown. In fact, many of these areas were never evaluated for cultural resources prior to construction and we have little to no record of the resources that have been impacted by these early construction activities. Since the trenching activities for the pipeline are expected to go quite deep in some places (deeper than prior construction and into native, previously undisturbed soils), the possibility of uncovering deeply buried resources is very high. As such, adequate mitigation is necessary to address the impacts to cultural resources.

We thank WMWD for working with the Tribe to develop mitigation that includes the Tribe. The Tribe would request that WMWD continue to work with the Tribe to assure adequate and enforceable mitigation measures for this Project. Given the sensitivity of the Project area, it is the position of the Pechanga Tribe that Pechanga tribal monitors be required to be present during all ground-disturbing activities conducted in connection with the Project Reaches that are within the Pechanga Tribe's aboriginal territory as discussed previously, including any additional archeological excavations performed.

Response to Comment 5:

The Project reaches and facilities which will be located south of the Santa Ana River are: a portion of the Central Reach, Reaches E, F, G and H, the La Sierra Pipeline Connection and the Mockingbird Connection. The Draft SEIR/EIS identified, with respect to the area of concern for the Tribe, that "other areas where previously and newly recorded sites have been identified within the APE, as well as the Santa Ana River crossing and the southernmost section of the Realignment Alternatives' Central Reach have also been identified as having high to moderate potential for buried cultural resources." (Draft SEIR/EIS, pp. 4.4-21) These sites are described further in the cultural resources reports for the Project (Draft SEIR/EIS Appendix E).

Prior to construction, mitigation measures **MM Cult 2, 2a**, and **3** will be implemented regarding disposition and treatment of cultural resources and monitoring. No new significant impacts or information not previously addressed in the SEIR/EIS was identified by this comment. No further analysis is required.

Comment 6:

PROJECT MITIGATION MEASURES

Environmental Impact Reports and any supplemental or subsequent documents must provide adequate protection for significant archaeological and cultural sites and adequately follow the provisions of CEQA and its Guidelines, including Calif. Pub. Res. Code § 21083.2(b) (avoidance as preferred method of preservation of archaeological resources), CEQA Guidelines § 15126.4(b)(3) (agencies should avoid effects on historical resources of archaeological nature), and CEQA Guidelines § 15020 (lead agency responsible for adequacy of environmental documents).

The Tribe has the following comments on the proposed mitigation measures for cultural resources presented in the January 2011 DSEIR/EIS for this Project. We request the existing MM and the edits below be incorporated into the final environmental document.

The Tribe has some specific concerns regarding MM Cult 2. The term Most Likely Descendent (MLD) is a legal term which is utilized under state law only when human remains have been encountered. (See California Public Resources Code Section 5097.98) Therefore, it is legally inaccurate to use the term as it is intended in the mitigation measure. The Tribe had previously suggested that the *concept* underlying the determination of an MLD might be useful in making a determination regarding which tribe is culturally affiliated for each reach for purposes of monitoring. The Tribe further suggested that WMWD consult with the NAHC to request assistance in making that determination. The Tribe believes that WMWD understood the concept as such, but we are now concerned that the wording of the mitigation measure does not reflect this understanding. As such, the Tribe is providing more detailed comments and revisions to MM Cult 2 as set forth below.

MM Cult 1: (CULT-3) In order to reduce potential significant impacts to historic and non-Native American archaeological and historic resources, full-time archaeological monitoring during excavations shall be conducted in sensitive areas (e.g., near the Santa Ana River crossing, Mockingbird Canyon and La Sierra), within undeveloped areas along the project alignment, at the Gage Canal crossing in the cities of Riverside and Grand Terrace, at the Railroad crossings (AT&SF Railroad Alignment and Southern Pacific Railroad), the Riverside Canal, at Victoria Avenue and Irving Street and within previously undisturbed native soils. The extent and duration of the archaeological monitoring shall be determined by a Riverside County and Secretary of the Interior qualified archaeologist, in consultation with tribal representatives, once the construction schedule is defined for each reach of project construction. In the event of an accidental discovery, the archaeological monitor will comply with State CEQA Guidelines section 15064.5.

MM Cult 1a: (CULT-1) If non-Native American archaeological or historic resources are discovered, the local jurisdiction and land owner where the resources are found will be notified by WMWD. Depending on the nature of the resource, appropriate mitigation and monitoring will be developed by WMWD in conjunction with all affected parties and the on-site archaeologist, and may include such things as:

-Documentation, removal, and curation at a local museum, federal repository or other appropriate steward agency.
-Documentation and retention in place.
-Further detailed archaeological studies to determine the nature and extent of the find.
-Retention by the land owner.
-Other measures agreed upon by the parties involved.

MM Cult 2: (CULT-3) In response to comments from local tribes and to be sensitive to the cultural heritage of the tribes that have claimed an interest in the project area, the ~~archaeological~~ tribal monitoring program shall be executed in conjunction with the ~~tribes~~ archaeological monitoring program. The tribes shall ~~to~~ assist in determining which areas of the project alignment are in sensitive locations and where undisturbed soils will be excavated. Such areas will include, at a minimum: the Santa Ana River (San Bernardino County), ~~and~~ Springbrook Wash (Riverside County and City) crossings, ~~and~~ a natural area near Irving and Firethorn Streets (Mockingbird Canyon area) in the City of Riverside, and the La Sierra area. Prior to grading, WMWD shall enter into a Treatment and Monitoring Agreement for one paid monitor for each Reach of project construction with the culturally affiliated tribe, as determined by WMWD, where undisturbed native soils will be affected and/or sensitive resources are likely.

WMWD may seek the assistance of the Native American Heritage Commission (NAHC) in making the determination of cultural affiliation. ~~Prior to grading, WMWD shall contact the Native American Heritage Commission (NAHC) to determine the Most Likely Descendent (MLD)[3] within any given Reach where the pipeline is to be constructed. WMWD shall enter into a pre-excavation agreement for one paid monitor with the Native American tribe identified by the NAHC as the MLD for each Reach of project construction where undisturbed native soils will be affected and sensitive resources are likely. In the event of an accidental discovery, the archaeological monitor will comply with State CEQA Guidelines section 15064.5.~~ To respond to the expressed desire of each tribe to monitor construction in sensitive areas and in the spirit of interagency cooperation, the Pechanga, ~~Ramona~~, and San Manuel bands shall be notified by WMWD, prior to excavation activities.

MM Cult 2a: Additional tribes responded during the archaeological surveys performed for the Realignment Alternatives. To respond to the expressed desire of these additional tribes to monitor construction in sensitive areas and/or be consulted if finds are made, and in the spirit of interagency cooperation, the Morongo Band of Mission Indians, Soboba Band of Luiseno Indians and ~~Gabrieleno/Tongva San Gabriel Band of Mission Indians~~ shall be notified by WMWD, prior to excavation Activities

MM Cult 3: (CULT-1) To ensure the proper disposition of cultural resources of interest to the tribes uncovered during excavation for the installation of the RCF Project, WMWD shall seek input from the tribes to develop a plan for such dispersal that encompasses the tribes' desired treatment and disposition of Native American cultural resources, including human remains. After considering the tribes' input and recommendations, WMWD shall approve and finalize such a plan prior to grading. In the alternative, WMWD may chose to negotiate treatment and disposition within the Treatment Agreements entered into with the MLD/appropriate tribe for each Reach. WMWD shall follow either the Plan or the Treatment Agreement for resources found on WMWD lands. Further, WMWD shall agree to present the plan and encourage land owners to follow the plan if cultural resources of interest to the tribes are found on land not owned by WMWD.

MM Cult 5: (CULT-2) If human remains are uncovered at any time, all activities in the area of the find shall be halted by WMWD or its contractor and the County Coroner shall be notified immediately pursuant to CA Health & Safety Code Section 7050.5 and CA PRC Section 5097.98. If the Coroner determines that the remains are of Native American origin, the Native American Heritage Commission (NAHC) shall be notified by the Coroner. The NAHC will determine and notify the Most Likely Descendent (MLD). The MLD shall be allowed to inspect the site of the discovery. The MLD shall complete the inspection and make recommendations for treatment within ~~24~~ 48 hours of notification by the NAHC.

MM Cult 5a: If a sacred site is encountered within the project alignment, WMWD will work with the tribes to avoid the site, if feasible.

Response to Comment 6:

WMWD and the U.S. Bureau of Reclamation ("BOR") will comply with state and federal laws and work with the Pechanga and other tribes who have expressed interest in the Project to assure proper respect and protections are given to cultural resources of importance to the tribes, as appropriate. With this approach in mind, no Native American tribes, bands or groups (whether federally-recognized or not) will be written out of the mitigation measures, as requested in this comment.

WMWD and the BOR met with Pechanga Cultural Resources staff and counsel, and outside counsel (Tribal representatives) on 8/2/11 to discuss revisions to the cultural mitigation measures in the Riverside Corona Feeder SEIR/EIS. Recommended changes to mitigation measures that agreed upon by WMWD, BOR and Tribal representatives are reflected below and will be incorporated into the annotated Final SEIR/EIS and final Mitigation Monitoring and Reporting Program (MMRP):

MM Cult 1: (CULT-3) In order to reduce potential significant impacts to historic and non-Native American archaeological and historic resources, full-time archaeological monitoring during excavations shall be conducted in sensitive areas (e.g., near the Santa Ana River crossing, Mockingbird Canyon and La Sierra), within undeveloped areas along the project alignment, near Riverside Highland Water facility site thought to be in the vicinity of Barton Road (north of Palm Avenue), at the Gage Canal crossing in the cities of Riverside and Grand Terrace, at the Railroad crossings (AT&SF Railroad Alignment and Southern Pacific Railroad), the Riverside Canal, at Victoria Avenue and Irving Street. The extent and duration of the archaeological monitoring shall be determined by a Secretary of the Interior qualified archaeologist who is also qualified by Riverside County or the San Bernardino Archaeological Information Center (SBAIC) located at the San Bernardino County Museum, as appropriate to the location of the portion of the Project to be under construction, once the construction schedule is defined for each reach of project construction. In the event of an accidental discovery, the archaeological monitor will comply with State *CEQA Guidelines* Section 15064.5.

MM Cult 1a: No changes proposed.

MM Cult 2: (CULT-3) In response to comments from local tribes and to be sensitive to the cultural heritage of the tribes that have claimed an interest in the project area, the archaeological monitoring program shall be executed in conjunction with the tribes. As part of the preparation of the archaeological monitoring program, the interested tribes shall ~~to~~ assist in determining which areas of the project alignment where undisturbed soils will be excavated should be considered to be~~are in~~ S~~s~~ensitive Areas~~locations~~ requiring monitoring~~where undisturbed soils will be excavated~~. For the purposes of this mitigation measure, "undisturbed soils" shall mean: soil which has never been previously excavated or disturbed for construction or other purposes, and soil that was previously excavated but for which no archaeological or Native American monitoring was performed. "Sensitive~~Such~~ A~~a~~reas" ~~will~~include, at a minimum: the Santa Ana River (San Bernardino County) ~~and~~ Springbrook Wash (Riverside County and City) crossings, ~~and~~ a natural area near Irving and Firethorn Streets (Mockingbird Canyon area) in the City of Riverside, and the La Sierra area. Prior to grading, WMWD shall enter into a Treatment and Monitoring Agreement for one paid monitor for each reach of project construction with the culturally affiliated tribe, as determined by WMWD.

WMWD may seek the assistance of the Native American Heritage Commission (NAHC) in making the determination of cultural affiliation. ~~Prior to grading, WMWD shall contact the Native American Heritage Commission (NAHC) to determine the Most Likely Descendent (MLD) within any given Reach where the pipeline is to be constructed. WMWD shall enter into a pre-excavation agreement for one paid monitor with the Native American tribe identified by the NAHC as the MLD for each Reach of project construction where undisturbed native soils will be affected and sensitive resources are likely. In the event of an accidental discovery, the archaeological monitor will comply with State CEQA Guidelines section 15064.5.~~ To respond to the expressed desire of each tribe to monitor construction in sensitive areas and in the spirit of interagency cooperation, the Pechanga, Ramona, and San Manuel shall be notified by WMWD, prior to excavation activities.

MM Cult 2a: No changes will be made because WMWD will notify all Native American tribes and other parties who have expressed an. interest in the project and/or requested notification.

MM Cult 3: (CULT-1) To ensure the proper disposition of cultural resources of interest to the tribes uncovered during excavation for the installation of the RCF Project, WMWD shall seek input from the tribes to develop a Discovery P~~p~~lan for such dispersal that encompasses the tribes' desired treatment and disposition of Native American cultural resources, including human

remains. After considering the tribes' input and recommendations, WMWD shall approve and finalize such a plan prior to grading. In the alternative, WMWD may choose to negotiate treatment and disposition within the Treatment Agreements entered into with the ~~MLD~~ culturally affiliated appropriate tribe for each reach of construction. WMWD shall follow either the Discovery Plan or the Treatment Agreement for resources found on WMWD lands. Further, WMWD shall agree to present the plan and encourage land owners to follow the plan if cultural resources of interest to the tribes are found on land not owned by WMWD. In all cases, the actions of WMWD in its treatment of accidentally-discovered cultural resources shall be consistent with the requirements of CEQA Guidelines section 15064.5, the provisions of the Public Resources Code, and any other applicable state or federal law.

MM Cult 5: (CULT-2) If human remains are uncovered at any time, all activities in the area of the find shall be halted by WMWD or its contractor and the County Coroner shall be notified immediately pursuant to CA Health & Safety Code Section 7050.5 and CA PRC Section 5097.98. If the Coroner determines that the remains are of Native American origin, the Native American Heritage Commission (NAHC) shall be notified by the Coroner. The NAHC will determine and notify the Most Likely Descendent (MLD). The MLD shall be allowed to inspect the site of the discovery. The MLD shall complete the inspection and make recommendations for treatment within ~~24~~48 hours of notification by the NAHC.

MM Cult 5a: No change proposed.

Comment 7:

The Tribe reserves the right to fully participate in the environmental review process, as well as to provide further comment on the Project's impacts to cultural resources and potential mitigation for such impacts. Further, the Tribe reserves the right to participate in the regulatory process and provide comment on issues pertaining to the regulatory process and Project approval.

The Pechanga Tribe looks forward to continuing working together with MWMD in protecting the invaluable Pechanga cultural resources found in the Project area. Please contact me at 951-308-9295 X8104 if you have any comments or concerns. Thank you.

Response to Comment 7:

See **Response to Comments 1** and **4**, above.

COPIES OF COMMENT LETTERS

DEPARTMENT OF TRANSPORTATION
DISTRICT 8
PLANNING
464 WEST 4th STREET, 6th Floor MS 725
SAN BERNARDINO, CA 92401-1400
PHONE (909) 383-4557
FAX (909) 383-6890
TTY (909) 383-6300

Flex your power!
Be energy efficient!

January 31, 2011

Fakhri Manghi
Senior Water Resource Engineer
Western Municipal Water District
14205 Meridian Parkway
Rivesride, CA 92518

Notice of Completion & availability of a Draft Supplemental Environmental Impact Report and Draft Environmental Impact Statement for the Riverside-Corona Feeder Realignment. SCH: 2003031121. Riv-91-Various.

Dear Mr. Manghi,

We have completed our review for the noted project which is mostly located within street right-of-way in the Jurupa area of unincorporated Riverside County, portions of San Bernardino County, and cities of San Bernardino, Colton, Rialto, Riverside, and Corona. The project facilities will also run northeast to southwest and generally parallel to Interstate 215 (I-215) and State Route 91 (SR-91).

As the owner and operator of the State Highway System (SHS), it is our responsibility to coordinate and consult with local jurisdictions when proposed development may impact our facilities. As the responsible agency under the California Environmental Quality Act (CEQA), it is also our responsibility to make recommendations to offset associated impacts with the proposed project. Although the project is under the jurisdiction of the City of Riverside due to the Project's potential impact to State facilities it is also subject to the policies and regulations that govern the SHS.

We do not anticipate this project will generate any additional traffic to the SHS. However, due to this project any activities before, during, or construction within, under, or over the State Highway Right of Way, an Encroachment Permit is required.

Permit Requirements:

1. Any proposed alterations to existing improvements within State right-of-way may only be performed upon issuance of a valid encroachment permit and must conform to current Caltrans design standards and construction practices.
2. Review and approval of street, grading and drainage construction plans will be necessary prior to permit issuance. Information regarding permit application and submittal requirements may be obtained by contacting:

Office of Encroachment Permits
Department of Transportation
464 West 4th Street, 6th Floor, MS-619
San Bernardino, CA 92401-1400
(909) 383-4526

We appreciate the opportunity to offer comments concerning this project. If you have any questions regarding this letter, please contact Joe Shaer at (909) 383-6908 or myself at (909) 383-4557 for assistance.

Sincerely,

DANIEL KOPULSKY
Office Chief
Community Planning/IGR-CEQA

RIVERSIDE COUNTY
FIRE DEPARTMENT
In cooperation with the
California Department of Forestry and Fire Protection

210 West San Jacinto Avenue • Perris, California 92570 • (951) 940-6900 • Fax (951) 940-6910

John R. Hawkins
Fire Chief

Proudly serving the unincorporated areas of Riverside County and the Cities of:

Banning
Beaumont
Calimesa
Canyon Lake
Coachella
Desert Hot Springs
Indian Wells
Indio
Lake Elsinore
La Quinta
Moreno Valley
Palm Desert
Perris
Rancho Mirage
Rubidoux CSD
San Jacinto
Temecula

Board of Supervisors

Bob Buster, District 1

John Tavaglione, District 2

Jeff Stone, District 3

John Benoit, District 4

Marion Ashley, District 5

January 26, 2011

Western Municipal Water District
Fakhri Manghi, Senior Water Resource Engineer
1405 meridian Parkway
Riverside, CA 92518

RE: Notice of Completion & Availability of a Draft Supplemental Environmental Impact Report and Draft Environmental Impact Statement (SEIR/EIS) for the Riverside-Corona Feeder Realignment, SCH # 2003031121, DOI Filing No. 11-1

Dear Fakhri Manghi,

Thank you for providing the Riverside County Fire Department the opportunity to review the Draft Supplemental Environmental Impact Report and Draft Environmental Impact Statement (SEIR/EIS) for the Riverside Corona Feeder Realignment project.

With respect to the referenced project, the Riverside County Fire Department has no further comments. All of the impacts have been adequately addressed.

The California Fire Code outlines fire protection standards for the safety, health, and welfare of the public. These standards will be enforced by the Fire Chief.

If I can be of further assistance, please feel free to contact me at (951) 940-6349 or e-mail at jason.neumann@fire.ca.gov

Sincerely,

Jason Neuman

Jason Neuman, Fire Captain
Strategic Planning Bureau

WARREN D. WILLIAMS
General Manager-Chief Engineer

1995 MARKET STREET
RIVERSIDE, CA 92501
951.955.1200
FAX 951.788.9965
www.rcflood.org

RIVERSIDE COUNTY FLOOD CONTROL AND WATER CONSERVATION DISTRICT

January 26, 2011

RECEIVED
JAN 28 2011
Water Resources

Mr. Jack Safely, Director of Water Resources
Western Municipal Water District
14205 Meridian Parkway
Riverside, CA 92518

Dear Mr. Safely:

Re: Draft Supplemental Environmental Impact Report/Environmental Impact Statement for the Riverside-Corona Feeder Project

This letter is written in response to the Draft Supplemental Environmental Impact Report/Environmental Impact Statement (DSEIR/EIS) for the Riverside-Corona Feeder Project. The proposed project is an alternate alignment for the Riverside-Corona Feeder (RCF) previously evaluated in a Program Environmental Report certified May 18, 2005. The RCF project includes a large capacity, 28 mile long water pipeline ranging in diameter up to 78 inches, up to 20 new and existing wells, and appurtenant facilities associated with aquifer storage and recovery. Imported water supplies would be recharged into the Bunker Hill basin area for later use, taking advantage of available storage capacity.

The Riverside County Flood Control and Water Conservation District is providing the following comment/concern that should be addressed in the FSEIR/EIS:

> The DSEIR/EIS on Page 2.0-11 states "RCFC&WCD will require coordination and may require encroachment permits for any facilities encroaching upon facilities or facilities easements owned by MWD". MWD should be replaced by RCFC&WCD in the FSEIR/EIS.

Thank you for the opportunity to comment on the DSEIR/EIS. Please forward any subsequent environmental documents regarding the project to my attention at this office. Any further questions concerning this letter may be referred to Hilal Elhaddad at 951.955.8582 or me at 951.955.8581.

Very truly yours,

KRIS FLANIGAN
Senior Civil Engineer

ec: Riverside County Planning Dept.
Attn: Kristi Lovelady
Stuart McKibbin
Ed Lotz

HAE:mcv
P8\135252

ORANGE COUNTY
OC PublicWorks
Our Community. Our Commitment.

Jess A. Carbajal, Director
300 N. Flower Street
Santa Ana, CA

P.O. Box 4048
Santa Ana, CA 92702-4048

Telephone: (714) 834-2300
Fax: (714) 834-5188

NCL 11-003

February 28, 2011

Fakhri Manghi, Senior Water Resource Engineer
Western Municipal Water District
14205 Meridian Parkway
Riverside, California 92518

SUBJECT: Notice of Completion and Availability of a Draft Supplemental Environmental Impact Report and Draft Environmental Impact Statement (SEIR/EIS) for the Riverside-Corona Feeder Realignment – NCL 11-003

Dear Mr. Manghi:

The County of Orange has reviewed the : Notice of Completion and Availability of a Draft Supplemental Environmental Impact Report and Draft Environmental Impact Statement (SEIR/EIS) for the Riverside-Corona Feeder Realignment located in the City of San Bernardino and offers the following comments:

Environmental Resources:

In response to your request for input on the subject project, Environmental Resources has reviewed the document, and offers the following comment::

1. The reference on EIR Page 4, 11-10 (last paragraph) to the 2003 Santa Ana Region de minimus permit is outdated. The correct reference is Order R8-2009-0003.

If you require any additional information, please contact Grant Sharp at (714) 955-00674.

Sincerely,

Michael Balsamo, Manager
General Land Use Planning

MB/mmc

cc: Chris Crompton, Environmental Resources

STATE OF CALIFORNIA -- CALIFORNIA NATURAL RESOURCES AGENCY

EDMUND G. BROWN JR., *Governor*

DEPARTMENT OF WATER RESOURCES
1416 NINTH STREET, P.O. BOX 942836
SACRAMENTO, CA 94236-0001
(916) 653-5791

RECEIVED
MAR 03 2011
Water Resources

FEB 28 2011

Mr. Jack Safely
Western Municipal Water District
14205 Meridian Parkway
Riverside, California 92518

Draft Supplemental Environmental Impact Report/Environmental Impact Statement, Western Municipal Water District, Riverside-Corona Feeder Realignment Project, California Aqueduct East Branch, Approximate Milepost 423, Southern Field Division, Riverside and San Bernardino County, SCH2003031121

Dear Mr. Safely:

Thank you for the opportunity to review and comment on the Draft Supplemental Environmental Impact Report/Environmental Impact Statement for the Riverside-Corona Feeder Realignment Project (RCF). The notice illustrates the proposal by Western Municipal Water District to construct a new water pipeline to serve portions of San Bernardino and Riverside Counties. In addition, the applicant proposes to install a series of injection and extraction wells to manage the groundwater in the San Bernardino Basin Area. The majority of work for the RCF proposal consists of a 78-inch diameter pipeline that will extend approximately 28 miles across multiple jurisdictions with connections to other Western Municipal Water District facilities. The proposed pipeline realignment near the Central Feeder Connection will cross the Department of Water Resources' (DWR) California Aqueduct, Santa Ana Pipeline (SAPL) near Fairway Drive in the Community of Colton.

Since the proposed water line alignment for the RCF Realignment Project will cross DWR's California Aqueduct, SAPL Right of Way, it will require an Encroachment Permit from DWR prior to the start of construction. Information on obtaining an encroachment permit from DWR can be viewed at:

http://www.doe.water.ca.gov/Services/Real_Estate/Encroach_Rel/index.cfm

Please provide DWR with a copy of any subsequent environmental documentation when it becomes available for public review. Any future correspondence relating to this project should be sent to:

Leroy Ellinghouse, Chief
SWP Encroachments Section
Division of Operations and Maintenance
Department of Water Resources
1416 Ninth Street, Room 641-1
Sacramento, California 95814

In addition, please continue to keep DWR informed of any future actions with respect to the RCF Realignment Project.

If you have any questions, please contact Leroy Ellinghouse, Chief of the SWP Encroachments Section, at (916) 653-7168 or Mike Anderson at (916) 653-6664.

Sincerely,

David M. Samson, Chief
State Water Project Operations Support Office
Division of Operations and Maintenance

cc: State Clearinghouse
Office of Planning and Research
1400 Tenth Street, Room 121
Sacramento, California 95814

Department of Toxic Substances Control

Linda S. Adams
Acting Secretary for
Environmental Protection

Leonard E. Robinson
Acting Director
5796 Corporate Avenue
Cypress, California 90630

Edmund G. Brown Jr.
Governor

RECEIVED
MAR 04 2011
Water Resources

March 3, 2011

Mr. Jack Safely
Western Municipal Water District
14205 Meridian Parkway
Riverside, California 92518

NOTICE OF COMPLETION & ENVIRONMENTAL IMPACT REPORT (EIR) FOR THE RIVERSIDE-CORONA FEEDER PROJECT (SCH# 2003031121)

Dear Mr. Safely:

The Department of Toxic Substances Control (DTSC) has received your submitted Notice of Availability of the Environmental Impact Report for the above-mentioned project. The following project description is stated in your document: "The Riverside-Corona Feeder (RCF) project includes a large capacity, 28-mile long water pipeline ranging in diameter up to 78 inches, up to 20 new and existing wells, and appurtenant facilities associated with aquifer storage and recovery. The proposed project is an alternate alignment (herein "realignment") for the RCF previously evaluated in a Program Environmental Impact Report (PEIR) certified May 18, 2005. The RCF would deliver water from the San Bernardino Groundwater Basin (herein "Basin Area" aka "Bunker Hill") and Chino groundwater basin (herein "Chino Basin"). Imported water supplies would be recharged into the Bunker Hill Basin area for later use, taking advantage of available storage capacity. The new alignment will not change the number of wells or the Bunker Hill groundwater extraction described in the 2005 PEIR.

Groundwater supplies are also available to the RCF realignment from the Chino Basin under the Optimum Basin Management Plan from desalted facilities. The purpose of the RCF is to increase firm water supplies, to improve water quality, and to reduce water costs. The project proposes to manage the groundwater levels through the construction of groundwater wells and pumps to deliver the groundwater supply to water users. The new water pipeline will serve portions of San Bernardino and Riverside counties and is sized to move up to 40,000 acre feet of water at 100 cubic feet per second (cfs). This system of storage, extraction and distribution will improve the reliability of WMWD's

water supply through the managed storage and distribution of excess imported water and reduce possible water shortages during dry years".

DTSC sent you comments on the previous EIR on 9/10/2008. Based on the review of the submitted document DTSC has the additional following comments:

1) If it is determined that hazardous wastes are, or will be, generated by the proposed operations, the wastes must be managed in accordance with the California Hazardous Waste Control Law (California Health and Safety Code, Division 20, Chapter 6.5) and the Hazardous Waste Control Regulations (California Code of Regulations, Title 22, Division 4.5). If it is determined that hazardous wastes will be generated, the facility should also obtain a United States Environmental Protection Agency Identification Number by contacting (800) 618-6942. Certain hazardous waste treatment processes or hazardous materials, handling, storage or uses may require authorization from the local Certified Unified Program Agency (CUPA). Information about the requirement for authorization can be obtained by contacting your local CUPA.

2) DTSC can provide cleanup oversight through an Environmental Oversight Agreement (EOA) for government agencies that are not responsible parties, or a Voluntary Cleanup Agreement (VCA) for private parties. For additional information on the EOA or VCA, please see www.dtsc.ca.gov/SiteCleanup/Brownfields, or contact Ms. Maryam Tasnif-Abbasi, DTSC's Voluntary Cleanup Coordinator, at (714) 484-5489.

If you have any questions regarding this letter, please contact me at ashami@dtsc.ca.gov, or by phone at (714) 484-5472.

Sincerely,

Al Shami
Project Manager
Brownfields and Environmental Restoration Program

cc: Governor's Office of Planning and Research
State Clearinghouse
P.O. Box 3044
Sacramento, California 95812-3044
state.clearinghouse@opr.ca.gov

cc: CEQA Tracking Center
Department of Toxic Substances Control
Office of Environmental Planning and Analysis
P.O. Box 806
Sacramento, California 95812
ADelacr1@dtsc.ca.gov

CEQA # 3136

AIRPORT LAND USE COMMISSION
RIVERSIDE COUNTY

CHAIR
Simon Housman
Rancho Mirage

VICE CHAIRMAN
Rod Ballance
Riverside

COMMISSIONERS

Arthur Butler
Riverside

John Lyon
Riverside

Glen Holmes
Hemet

Greg Pettis
Cathedral City

Richard Stewart
Moreno Valley

STAFF

Director
Ed Cooper

John Guerin
Russell Brady
Barbara Santos

County Administrative Center
4080 Lemon St., 14th Floor.
Riverside, CA 92501
(951) 955-5132

www.rcaluc.org

March 3, 2010

Fakhri Manghi, Senior Water Resource Engineer
Western Municipal Water District
14205 Meridian Parkway
Riverside CA 92518

RE: Riverside Corona Feeder Project Supplemental Environmental Impact Report and Environmental Impact Statement

Dear Mr. Manghi:

Thank you for providing the Riverside County Airport Land Use Commission (ALUC) with a CD copy of the above-referenced document. The report is well-written and informative, and we did not find any erroneous statements relating to airport land use compatibility. Our review of the project indicates that the project will include facilities within the Airport Influence Areas of Riverside Municipal Airport, Flabob Airport, and March Air Reserve Base. The pump station associated with the Clay Street Connection would be located within the Riverside Municipal Airport Influence Area. The reservoir associated with the Mockingbird Connection would be located within the March Air Reserve Base Airport Influence Area. The Northern Reach (which would be installed underground) would pass through the Flabob Airport Influence Area, as well as the Riverside Municipal Airport Influence Area.

The project extends into unincorporated Riverside County. In 2004, ALUC adopted a new Airport Land Use Compatibility Plan for Flabob Airport. In 2005, a new Airport Land Use Compatibility Plan was adopted for Riverside Municipal Airport. The County of Riverside has not yet amended its Jurupa Area Plan to be consistent with these Compatibility Plans. Until a determination is made by ALUC that the Jurupa Area Plan, as adopted in 2003 and as may have been subsequently amended, is consistent with these Compatibility Plans, projects affecting land within the portion of this Area Plan in Airport Influence Areas are subject to ALUC review.

If no permits from the Riverside County Planning Department will be required for the facilities proposed by this project, ALUC review of this project should be accomplished at the environmental stage. Information associated with project submission can be obtained from our website at www.rcaluc.org.

Thank you for your consideration of our comments. If you need further clarification or have any questions, please contact John Guerin of ALUC staff at (951) 955-0982.

Sincerely,
RIVERSIDE COUNTY AIRPORT LAND USE COMMISSION

_____
Edward C. Cooper, Director

Cc: Cathy Perring, Principal Environmental Planner, Albert A. Webb Associates
ALUC Staff

COUNTY OF RIVERSIDE

TRANSPORTATION AND LAND MANAGEMENT AGENCY

Transportation Department

Juan C. Perez, P.E., T.E.
Director of Transportation

March 8, 2011

Ms. Cathy Perring
Albert A. Webb Associates
3788 McCray Street
Riverside, CA 92506

RE: Riverside-Corona Feeder Project SEIR/EIS

Dear Ms. Perring:

Thank you for the opportunity to review and comment upon the Riverside-Corona Feeder Project SEIR/EIS. Based on my review of the alignments shown, I prepared a spreadsheet listing the capital projects in the Riverside County Transportation Improvement Program for FY 2011/12 and the Riverside County Economic Development Agency's transportation projects that may be impacted by the Riverside-Corona Feeder Project. I sent this spreadsheet to you by e-mail approximately two weeks ago. Please share this information with Western Municipal Water District so that the Riverside-Corona Feeder Project takes these Transportation capital projects into account.

I agree with all of the mitigation measures listed in the report and would like to emphasize the importance of having the contractor for the project follow all of the mitigation measures listed in the report in Section 4.12 – Transportation and Traffic. I would also like Western Municipal Water District to contact the Riverside County Transportation Department at the earliest stages of the Feeder Project design so that we can provide the most up-to-date information on all affected transportation capital improvement projects under design and construction in the County and effectively coordinate our respective projects.

Please do not hesitate to call me if you have any questions. My phone number is (951) 955-2091 or you may e-mail me at fkhorash@rctlma.org.

Sincerely,

Farah Khorashadi

Farah Khorashadi
Engineering Division Manager

RDF:fk

4080 Lemon Street, 8th Floor • Riverside, California 92501 • (951) 955-6740
P.O. Box 1090 • Riverside, California 92502-1090 • FAX (951) 955-3198

Central Reach

OBJECTID *	PROJECT LI	PROJECT_TITLE	TERMINI_1	TERMINI_2	LENGTH	RD_BK_PG	ROAD_NO_	ROAD_NO_	ROAD_NO_	ROAD_NO_	SCOPE	WORK_CO	OBJECT_CC	LABOR_BY	LEAD_AGEI	IS_IN_TIP
196	B7075300	Clay St	General Dr	Linares Ave	0.2	15B	M2292				Const railroad grade separation	CON	BR	C	RCTD	1
52	B9098700	Clay St	De Anza Plaza Dr		0	15B	M2292				Install Traffic Signal	CON	SIG	C	RCTD	1

Northern Reach

OBJECTID *		PROJECT_TITLE	TERMINI_1	TERMINI_2	LENGTH	RD_BK_PG	ROAD_NO_	ROAD_NO_	ROAD_NO_	ROAD_NO_	SCOPE	WORK_CO	OBJECT_CC	LABOR_BY	LEAD_AGEI	IS_IN_TIP
17	EDA-001	Limonite Ave	600' W of El Palonio	Camino Real	0	15B					Median Improvement Project	CON	MED	Contractor	RCTD	1
208	B7075600	Rubidoux Blvd Int	SR 60		0.12	16B	S2011C	S2011B			Widen overcrossing and ramps	W	BR	C	RCTD	1
37	B6045900	Market St	Agua Mansa Rd		0	12	S2178	S2183			Install Traffic Signal	CON	SIG	C	RCTD	1
90	B4051200	Rubidoux Blvd	Market St/20th St		0.01	12	S2011C	S2178	S2052	M2052	Recon Signal	REC	SIG	C	RCTD	1

Arilington Desalter Pipeline

OBJECTID *		PROJECT_TITLE	TERMINI_1	TERMINI_2	LENGTH	RD_BK_PG	ROAD_NO_	ROAD_NO_	ROAD_NO_	ROAD_NO_	SCOPE	WORK_CO	OBJECT_CC	LABOR_BY	LEAD_AGEI	IS_IN_TIP
221	B4048200	Hamner Ave	Schleisman Rd(Realign		0	14C	S2700A	S1390B	M1390		Install Traffic Signal	CON	SIG	C	DEVEL	1
247	A5026800	Hamner Ave	Nly Harvest Dr 0.12 mi	Santa Ana Rive	4.5	5	S2700B	S2700A	S2700C		Landscape Improvements	LAN	MED	C	RCTD	1
2012	B3068400	Schleisman Rd In	Hamner Ave	I-15	0.5	14C	M1390				Const road, interchange and overcro	CON	INT	C	RCTD	1
2018	A5026900	Schleisman Rd	Hamner Ave	San Bernardin	3	14	S1390B				Recon, widen AC paved road	W REC	RDF	C	DEVEL	1

Mills Pipeline (Mockingbird Connection)

OBJECTID *		PROJECT_TITLE	TERMINI_1	TERMINI_2	LENGTH	RD_BK_PG	ROAD_NO_	ROAD_NO_	ROAD_NO_	ROAD_NO_	SCOPE	WORK_CO	OBJECT_CC	LABOR_BY	LEAD_AGEI	IS_IN_TIP
529	B8067700	Temescal Canyon	Cajalco Rd	El Cerrito Rd	1.1	30B	S1807A				Recon and Widen AC paved road	W REC A	RDF	C	RCTD	1
1600	C0055100	Cajalco Rd	Temescal Cyn Rd	I-215	16.1	57	S1062B	S1062A	S1062C		Widen AC paved road from 2 to 4 la	W	RDF	C	RCTD	1
1738	C1043800	Jolora Ave	Santa Rita St	840' Temescal	0.29	31	M1793				Reconst AC paved road	RES	RDF	DL	RCTD	1

Signal Synchronization at Van Buren Blvd

Reach H

OBJECTID *		PROJECT_TITLE	TERMINI_1	TERMINI_2	LENGTH	RD_BK_PG	ROAD_NO_	ROAD_NO_	ROAD_NO_	ROAD_NO_	SCOPE	WORK_CO	OBJECT_CC	LABOR_BY	LEAD_AGEI	IS_IN_TIP
8	B6046000	Magnolia Ave	Neece St		0	22	S1283	M1321			Install Traffic Signal	CON	SIG	C	RCTD	1

Reach B

OBJECTID *		PROJECT_TITLE	TERMINI_1	TERMINI_2	LENGTH	RD_BK_PG	ROAD_NO_	ROAD_NO_	ROAD_NO_	ROAD_NO_	SCOPE	WORK_CO	OBJECT_CC	LABOR_BY	LEAD_AGEI	IS_IN_TIP
2011	B5068400	Pigeon Pass Rd	Hidden Springs Dr	Center St	4.8	45	S3063	M3063	S3054		Construct portions and widen to 4 la	W	RDF	C	RCTD	1

IS_FUNDED	PROJECT_B	CON_BUDGET	IS_A_HOT_	PROJECT_S	CON_START_DATE	CON_FINISH_	FUND_SOU	PROJECT_S	PROJECT_F	LIMIT_1_ST	LIMIT_1_D	LIMIT_1_D	LIMIT_2_ST	LIMIT_2_D	LIMIT_2_D	LIMIT_1_P	LIMIT_1_X	LIMIT_1_X	LIMIT_1_R
1	42943000	31000000	1	Preparing F	8/31/2012	1/2/2014	*332*999*	CLAY ST	<Null>	GENERAL D	<Null>	<Null>	LINARES AV	<Null>	<Null>	{CLAY ST}{(	{6193962.2	{6193962.2	CLAY ST JU
1	365000	245000	0	Pending Pr	<Null>	<Null>	*369*	CLAY ST	<Null>	DE ANZA P	<Null>	<Null>	DE ANZA P	1	S	{CLAY ST}{[	{6194110.3	{6194110.3	CLAY ST JU

IS_FUNDED	PROJECT_B	CON_BUDGET	IS_A_HOT_	PROJECT_S	CON_START_DATE	CON_FINISH_	FUND_SOU	PROJECT_S	PROJECT_F	LIMIT_1_ST	LIMIT_1_D	LIMIT_1_D	LIMIT_2_ST	LIMIT_2_D	LIMIT_2_D	LIMIT_1_P	LIMIT_1_X	LIMIT_1_X	LIMIT_1_R
0	0	0	0	Pending Pr	<Null>	<Null>	*	LIMONITE A	<Null>	EL PALOMI	600	W	CAMINO RI	<Null>	<Null>	{LIMONITE	{6195267.6	{6195267.6	LIMONITE A
0	1642000	437000	0	Pending De	<Null>	<Null>	*343*201*	RUBIDOUX	INTERCHAN	SH-60	316.8	N	SH-60	316.8	S	{RUBIDOUX	{6212945.0	{6212945.0	RUBIDOUX
1	673000	407000	0	Preparing E	11/28/2011	6/15/2012	*369*134*	MARKET ST	<Null>	AGUA MAN	<Null>	<Null>	AGUA MAN	1	NW	{MARKET S	{6217001.3	{6217001.3	MARKET ST
1	226000	150000	0	Preparing E	11/28/2011	6/15/2012	*369*	RUBIDOUX	<Null>	20TH ST	<Null>	<Null>	20TH ST	1	N	{RUBIDOUX	{6216486.2	{6216486.2	RUBIDOUX

IS_FUNDED	PROJECT_B	CON_BUDGET	IS_A_HOT_	PROJECT_S	CON_START_DATE	CON_FINISH_	FUND_SOU	PROJECT_S	PROJECT_F	LIMIT_1_ST	LIMIT_1_D	LIMIT_1_D	LIMIT_2_ST	LIMIT_2_D	LIMIT_2_D	LIMIT_1_P	LIMIT_1_X	LIMIT_1_X	LIMIT_1_R
0	235000	235000	0	Pending Pr	<Null>	<Null>	*369*	HAMNER A	<Null>	A ST	<Null>	<Null>	A ST	100	S	{HAMNER A	{6164921.4	{6164921.4	HAMNER A
0	2355000	1885000	0	Pending Pr	<Null>	<Null>	*428*	HAMNER A	<Null>	HARVEST D	<Null>	<Null>	HARVEST D	23540	S	{HAMNER A	{6165151.0	{6165151.0	HAMNER A
1	69372000	37070000	1	Preparing F	8/11/2014	6/28/2016	*300*349*	SCHLEISMA	INTERCHAN	HAMNER A	<Null>	<Null>	I-15	<Null>	<Null>	{SCHLEISM	{6164937.6	{6164937.6	SCHLEISMA
0	6553000	5659000	0	Pending Pr	<Null>	<Null>	*428*	SCHLEISMA	<Null>	HAMNER A	<Null>	<Null>	HELLMAN A	<Null>	<Null>	{SCHLEISM	{6164937.6	{6164937.6	SCHLEISMA

IS_FUNDED	PROJECT_B	CON_BUDGET	IS_A_HOT_	PROJECT_S	CON_START_DATE	CON_FINISH_	FUND_SOU	PROJECT_S	PROJECT_F	LIMIT_1_ST	LIMIT_1_D	LIMIT_1_D	LIMIT_2_ST	LIMIT_2_D	LIMIT_2_D	LIMIT_1_P	LIMIT_1_X	LIMIT_1_X	LIMIT_1_R
0	4006000	1485000	0	Pending Pr	<Null>	<Null>	*343*999*	TEMESCAL	<Null>	CAJALCO R	<Null>	<Null>	EL CERRITC	<Null>	<Null>	{TEMESCAL	{6178908.9	{6178908.9	TEMESCAL
1	2E+08	134000000	0	Pending Pr	<Null>	<Null>	*108*332*	CAJALCO R	<Null>	TEMESCAL	<Null>	<Null>	SEATON AV	<Null>	<Null>	{CAJALCO F	{6178908.9	{6178908.9	CAJALCO R
1	110000	105000	0	Pending Co	6/6/2011	7/1/2011	*221*	JOLORA AV	<Null>	SANTA RITA	<Null>	<Null>	TEMESCAL	840	<Null>	{JOLORA A	{6176343.9	{6176343.9	JOLORA AV

IS_FUNDED	PROJECT_B	CON_BUDGET	IS_A_HOT_	PROJECT_S	CON_START_DATE	CON_FINISH_	FUND_SOU	PROJECT_S	PROJECT_F	LIMIT_1_ST	LIMIT_1_D	LIMIT_1_D	LIMIT_2_ST	LIMIT_2_D	LIMIT_2_D	LIMIT_1_P	LIMIT_1_X	LIMIT_1_X	LIMIT_1_R
1	952000	578000	0	Obtaining I	9/1/2011	12/6/2011	*369*218*	MAGNOLIA	<Null>	NEECE ST	<Null>	<Null>	NEECE ST	1	NE	{MAGNOLI	{6174229.2	{6174229.2	MAGNOLIA

IS_FUNDED	PROJECT_B	CON_BUDGET	IS_A_HOT_	PROJECT_S	CON_START_DATE	CON_FINISH_	FUND_SOU	PROJECT_S	PROJECT_F	LIMIT_1_ST	LIMIT_1_D	LIMIT_1_D	LIMIT_2_ST	LIMIT_2_D	LIMIT_2_D	LIMIT_1_P	LIMIT_1_X	LIMIT_1_X	LIMIT_1_R
1	5.39E+08	500000000	0	Pending Pr	12/11/2018	12/7/2021	*346*300*	PIGEON PA	<Null>	HIDDEN SP	<Null>	<Null>	CENTER ST	<Null>	<Null>	{PIGEON P	{6254397.7	{6254397.7	PIGEON PA

LIMIT_1_X	LIMIT_1_IN	LIMIT_2_P	LIMIT_2_X	LIMIT_2_X	LIMIT_2_R	LIMIT_2_X	LIMIT_2_IN	LIMIT_1_M	LIMIT_2_M	DRAWN	TIP_PAGE	TOOL_TIP	ANGLE	LOC_ERRO	Shape *	CALTRANS	CALTRANS	CALTRANS	NEEDS_MC	FROM_LAT	FROM_LON
{6193962.2	4768.998	{CLAY ST}{L	{6194093.2	{6194093.2	CLAY ST JU	{6194093.2	3771.284	4768.998	3771.284	N	125	B7-0753 - (	0	NO ERROR	Polyline M	0	0	0	1	33.9708	-117.462
{6194110.3	1843.497	{CLAY ST}{[	{6194110.3	{6194110.3	CLAY ST JU	{6194110.3	1843.497	1843.497	1844.497	N	126	B9-0987 - (	0.131865	NO ERROR	Point M	0	0	0	0	33.9761	-117.462

LIMIT_1_X	LIMIT_1_IN	LIMIT_2_P	LIMIT_2_X	LIMIT_2_X	LIMIT_2_R	LIMIT_2_X	LIMIT_2_IN	LIMIT_1_M	LIMIT_2_M	DRAWN	TIP_PAGE	TOOL_TIP	ANGLE	LOC_ERRO	Shape *	CALTRANS	CALTRANS	CALTRANS	NEEDS_MC	FROM_LAT	FROM_LON
{6195267.6	42041.29	{LIMONITE	{6197380.2	{6197380.2	LIMONITE /	{6197380.2	44157.92	41441.29	44157.92	N	151	EDA-001 - I	0	NO ERROR	Polyline M	0	0	0	0	33.9779	-117.46
{6212945.0	13185	{RUBIDOU	{6212945.0	{6212945.0	RUBIDOUX	{6212945.0	13185	12868.2	13501.8	N	174	B7-0756 - F	0	NO ERROR	Polyline M	1	0	1	1	34.00506	-117.4
{6217001.3	1526.052	{MARKET S	{6217001.3	{6217001.3	MARKET ST	{6217001.3	1526.052	1526.052	1525.052	N	155	B6-0459 - M	67.79933	NO ERROR	Point M	0	0	0	0	34.01904	-117.387
{6216486.2	6638.839	{RUBIDOU	{6216486.2	{6216486.2	RUBIDOUX	{6216486.2	6638.839	6638.839	6637.839	N	173	B4-0512 - F	10.2631	NO ERROR	Point M	0	0	0	0	34.0192	-117.389

LIMIT_1_X	LIMIT_1_IN	LIMIT_2_P	LIMIT_2_X	LIMIT_2_X	LIMIT_2_R	LIMIT_2_X	LIMIT_2_IN	LIMIT_1_M	LIMIT_2_M	DRAWN	TIP_PAGE	TOOL_TIP	LOC_ERRO	Shape *	CALTRANS	CALTRANS	CALTRANS	NEEDS_MC	FROM_LAT	FROM_LON	MID_LAT
{6164921.4	23571.14	{HAMNER /	{6164921.4	{6164921.4	HAMNER A	{6164921.4	23571.14	23571.14	23671.14	N	140	B4-0482 - H	NO ERROR	Polyline M	0	0	0	0	33.95687	-117.558	33.95674
{6165151.0	4372.861	{HAMNER /	{6165151.0	{6165151.0	HAMNER A	{6165151.0	4372.861	4372.861	27912.86	N	140	A5-0268 - H	NO ERROR	Polyline M	0	0	0	0	34.00963	-117.558	33.97729
{6164937.6	16996.23	{SCHLEISM	<Null>	<Null>	<Null>	<Null>	<Null>	16996.23	16997.23	Y	176	B3-0684 - S	<Null>	Polyline M	1	0	1	1	33.9594	-117.545	33.95677
{6164937.6	16996.23	{SCHLEISM	{6148970.1	{6148970.1	SCHLEISM A	{6148970.1	1000	16996.23	1000	Y	176	A5-0269 - S	<Null>	Polyline M	0	0	0	0	33.96006	-117.611	33.96083

LIMIT_1_X	LIMIT_1_IN	LIMIT_2_P	LIMIT_2_X	LIMIT_2_X	LIMIT_2_R	LIMIT_2_X	LIMIT_2_IN	LIMIT_1_M	LIMIT_2_M	DRAWN	TIP_PAGE	TOOL_TIP	LOC_ERRO	Shape *	CALTRANS	CALTRANS	CALTRANS	NEEDS_MC	FROM_LAT	FROM_LON	MID_LAT
{6178908.9	6899.364	{TEMESCAL	{6175157.6	{6175157.6	TEMESCAL	{6175157.6	1000	6899.364	1000	N	184	B8-0677 - T	NO ERROR	Polyline M	0	0	0	1	33.83595	-117.523	33.83009
{6178908.9	5235.787	{CAJALCO F	{6254469.6	{6254469.6	CAJALCO R	{6254469.6	87005.84	5235.787	87005.84	N	48	C0-0551 - (	NO ERROR	Polyline M	0	0	0	1	33.82378	-117.51	33.83177
{6176343.9	1000	{JOLORA A	{6176316.5	{6176316.5	JOLORA AV	{6176316.5	1467.377	1000	2094.755	N	146	C1-0438 - J	NO ERROR	Polyline M	0	0	0	1	33.83419	-117.519	33.83269

LIMIT_1_X	LIMIT_1_IN	LIMIT_2_P	LIMIT_2_X	LIMIT_2_X	LIMIT_2_R	LIMIT_2_X	LIMIT_2_IN	LIMIT_1_M	LIMIT_2_M	DRAWN	TIP_PAGE	TOOL_TIP	LOC_ANGL	LOC_ERRO	Shape *	CALTRANS	CALTRANS	CALTRANS	NEEDS_MC	FROM_LAT	FROM_LON
{6174229.2	59949.37	{MAGNOLI	{6174229.2	{6174229.2	MAGNOLIA	{6174229.2	59949.37	59949.37	59948.37	N	153	B6-0460 - M	299.4813	NO ERROR	Point M	0	0	0	0	33.87509	-117.526

LIMIT_1_X	LIMIT_1_IN	LIMIT_2_P	LIMIT_2_X	LIMIT_2_X	LIMIT_2_R	LIMIT_2_X	LIMIT_2_IN	LIMIT_1_M	LIMIT_2_M	DRAWN	TIP_PAGE	TOOL_TIP	LOC_ERRO	Shape *	CALTRANS	CALTRANS	CALTRANS	NEEDS_MC	FROM_LAT	FROM_LON	MID_LAT
{6254397.7	23395.27	{PIGEON P	<Null>	<Null>	<Null>	<Null>	<Null>	23395.27	23394.27	Y	391	B5-0684 - F	<Null>	Polyline M	0	0	0	1	34.00032	-117.277	33.99966

MID_LAT	MID_LONG	TO_LAT	TO_LONG	Shape_Length
33.96941	-117.462	33.96816	-117.463	997.7141
33.9761	-117.462	33.9761	-117.462	0

MID_LAT	MID_LONG	TO_LAT	TO_LONG	Shape_Length
33.97851	-117.456	33.97855	-117.452	2716.624
34.00436	-117.401	34.00368	-117.401	633.6
34.01904	-117.387	34.01904	-117.387	0
34.0192	-117.389	34.0192	-117.389	0

MID_LONG	TO_LAT	TO_LONG	Shape_Length
-117.558	33.9566	-117.558	99.99994
-117.558	33.94494	-117.558	23540
-117.551	33.95687	-117.558	4272.961
-117.584	33.95807	-117.563	16450.14

MID_LONG	TO_LAT	TO_LONG	Shape_Length
-117.516	33.82378	-117.51	5899.364
-117.392	33.83737	-117.262	81744.74
-117.519	33.83119	-117.519	1094.755

MID_LAT	MID_LONG	TO_LAT	TO_LONG
33.87509	-117.526	33.87509	-117.526

MID_LONG	TO_LAT	TO_LONG	Shape_Length
-117.277	34.01564	-117.314	37356.32

EDA PROJECTS

Central Reach

OBJECTID *	WORK_ORI	MISCELLAN	EDA_NUMI	PROJECT_NAME	PROJECT_LIMITS	COMMUNITY_NAME	SUPERV	PROJECT_SCOPE	STATUS	ENGINEER_
98	10630	0	0	Clay St	Limonite Ave to Van Buren Blvd	Pedley	2	Rehabilitate pavement, install signal at Linares	Completed	RCTD

Northern Reach

OBJECTID *	WORK_ORI	MISCELLAN	EDA_NUMI	PROJECT_NAME	PROJECT_LIMITS	COMMUNITY_NAME	SUPERV	PROJECT_SCOPE	STATUS	ENGINEER_
79	200001	3844	0	Limonite Ave	Van Buren Blvd to Mission Blvd	Pedley	2	Landscaped raised median & parkways	Completed	Webb Asso
82	200004	3924	0	Mission Blvd Phase 3	Riverview Dr to Crestmore Rd	Rubidoux	2	Parkway beautification and pop-outs; Overlay.	Construction	Krieger & S
45	400041	3950	0	Rubidoux Fire Station	Avalon St north of Mission Blvd	Rubidoux	2	Curb, gutter & sidewalk	Completed	STK Archite
22	300011	4157	0	Rubidoux Blvd Phase 1	SR-60 to 24th St	Rubidoux / Belltown	2	In-fill sidewalk	Completed	Psomas
1068	40512	0	0	Market St - Traffic signals & Raised median	Rubidoux Blvd to Agua Mansa Rd	Belltown	0	Raised medians, traffic signal, curb, gutter, sidewalk, p	Preliminary E	PBS&J
23	300011	4157	34	Rubidoux Blvd Phase 3	24th St to Production Cir	Rubidoux / Belltown	2	Landscape median	Completed	Psomas

Arlington Desalter Pipeline

OBJECTID *	WORK_ORI	MISCELLAN	EDA_NUMI	PROJECT_NAME	PROJECT_LIMITS	COMMUNITY_NAME	SUPERV	PROJECT_SCOPE	STATUS	ENGINEER_
24	6100030	4214	30	Eastvale Community Center - Fire Station	SW corner of Hamner Ave & Schleisr	Eastvale	2	Curb, gutter, sidewalk and parkway landscaping	Preliminary E	STK Archite

Mills Pipeline (Mockingbird Connection)

OBJECTID *	WORK_ORI	MISCELLAN	EDA_NUMI	PROJECT_NAME	PROJECT_LIMITS	COMMUNITY_NAME	SUPERV	PROJECT_SCOPE	STATUS	ENGINEER_
32	300008	3969	0	El Cerrito Rd Beautification	State St to Temescal Canyon Rd	El Cerrito	2	Landscape raised median; storm drain curb, gutter & s	Construction	Krieger Ste
92	6100029	4178	27	El Cerrito Sports Park	El Cerrito Rd from I-15 to East of Eve	El Cerrito	2	Curb, gutter, sidewalk, landscaped parkway, traffic sig	Completed	KWC - BML

Reach H

OBJECTID *	WORK_ORI	MISCELLAN	EDA_NUMI	PROJECT_NAME	PROJECT_LIMITS	COMMUNITY_NAME	SUPERV	PROJECT_SCOPE	STATUS	ENGINEER_
93	6100037	4236	38	Indiana Ave, Neece St, Brotherton St Sid walk	Neece St to Grant St	Home Gardens	2	Curb, gutter, paving, sidewalk, street lights	Preliminary E	
7	200056	3998	0	Magnolia Avenue Phase 2	Temescal St to Lincoln St	Home Gardens	2	Curb, gutter & sidewalk; landscaping of local streets.	Completed	AEI-CASC -
61	300010	3899	0	Home Gardens Library & Fire Station	Magnolia Ave (from Neece St to Bla	Home Gardens	2	Curb, gutter & sidewalk along improved library and fi	Completed	STK Archite

Reach B

No Projects

PROJECT_N	AFFECTED_	COMMENT	SHAPE *	SHAPE.STLength()
Cathy Wan	Clay St, Lin		Polyline	4952.239

PROJECT_N	AFFECTED_	COMMENT	SHAPE *	SHAPE.STLength()
Colby Catal		For further	Polyline	37113.99
Bob Lucas	Mission Blv	For further	Polyline	11004.08
Pam Baird		For further	Polyline	2610.943
Richard Me	Ribidoux Bl	For further	Polyline	5130.817
Dowling Ts	Market St,		Polyline	526.0119
Richard Me	Ribidoux Bl	For further	Polyline	2979.134

PROJECT_N	AFFECTED_	COMMENT	SHAPE *	SHAPE.STLength()
Mary Moh	Hamner Av	For further	Polyline	817.1568

PROJECT_N	AFFECTED_	COMMENT	SHAPE *	SHAPE.STLength()
Mary Moh	El Cerrito R	For further	Polyline	4872.415
Delia Flore	El Cerrito R	For further	Polyline	1422.949

PROJECT_N	AFFECTED_	COMMENT	SHAPE *	SHAPE.STLength()
Ward Max			Polyline	8555.709
Pam Baird		For further	Polyline	16349.91
Pam Baird		For further	Polyline	664.3441

City of Redlands

March 7, 2011

Fakhri Manghi, Senior Water Resources Engineer
Western Municipal Water District
14205 Meridian Parkway
Riverside, CA 92518

Dear Mr. Manghi,

In response to your agency's, Western Municipal Water District ("Western"), letter and Supplemental Environmental Impact Report/Environmental Impact Statement ("Report") regarding the Riverside-Corona Feeder project, I am providing the following comments. This project involves the extraction of water from the Bunker Hill basin in the city of Redlands for use in your service area. In your agency's Report it states, Western has designed the project facilities to produce up to 40,000 acre feet per year, which will be imported into your service area from the Bunker Hill basin.

However, model runs identified in the Report were conducted to simulate extractions up to 163,300 acre feet. Because of this, and the fact the 20 wells proposed will have a production capacity of over 70,000 acre feet per year, and the 78 inch pipeline has a carrying capacity of nearly 168,000 acre feet per year, the final build-out capability of the project was not fully understood. The Report also states State Water Project ("SWP") water will be used as recharge water for extractions from the basin. In addition, the Report states recharge activities will occur in existing facilities located within the basin. This could be difficult, if not impossible, as existing facilities are often fully utilized to meet the needs of local agencies. Because of this, additional studies should be conducted to identify what recharge facilities will be available to meet Western's needs, and if necessary, the construction of new facilities should be included and analyzed in your Report and project.

Currently, there is no policy for conjunctive use on the basin. However, the Western-San Bernardino Watermaster is conducting a comprehensive review of management policies and procedures with stakeholders. The Report should recognize this review and abide by policies and procedures that occur as a result of the review process.
The Report also states ground water quality will improve in the San Bernardino area as a result of increased pumping. However, there is little mention of migration of chemicals such as DBCP, except to say DBCP will not be added by the project. Additionally there is no mention of 1,2,3 TCP at all. In fact, Redlands has extensively sampled for and studied these chemicals in the basin. Because of the known location of these chemicals and the proposed location of your project wells in Redlands, there is concern these chemicals could be pulled towards Redlands' 38 and 39 wells. Further study is needed to determine to what extent mitigation measures are necessary should this occur, and should be included as part of your Report.

Also a concern is the impact to the TDS level in the Redlands area. Redlands has been providing sewer service to its customers since 1932. As part of the city's operating permit for its wastewater treatment plant ("WWTP"), the Regional Water Quality Board ("Regional Board") has established a TDS discharge limit of 465 mg/l. In your Report on page 4.7-3 it states the water quality in the basin near the eastern mountains, the area near Redlands, has a TDS level below 200 mg/l. The Report also states on pages 4.7-5 and 4.7-22 the TDS level in SWP water ranges from 225 mg/l to 325 mg/l, and has an average level of 250 mg/l.

Currently, Redlands discharges water with a TDS level of approximately 440 mg/l. The Regional Board's established limit is only 25 mg/l above the Redlands's current discharges. As explained in your Report, as part of the project, when Western exports water from the Bunker Hill basin, Western will recharge using SWP water to meet its replenishment obligation. This process could result in a higher TDS in the basin. The Report identified the TDS level in SWP water is higher than the water being exported from the Redlands area.

If the result of the project, exporting tens of thousands of acre feet of low TDS water from the Redlands area, is higher TDS in the basin and this leads to Redlands exceeding its Regional Board TDS discharge limit, how will Western mitigate impacts to Redlands? And, at what point will Western take ownership if TDS levels increase in the basin and prevent Redlands from exceeding its discharge limit? These questions must be answered through a scientific study before the project can continue.

I look forward to hearing from you and I am available to discuss these and other issues you may have.

Very truly yours,

Chris Diggs
Assistant Utilities Director

cc: Rosemary Hoerning, Municipal Utilities and Engineering Director

COMMUNITY DEVELOPMENT DEPARTMENT

PLANNING DIVISION

300 North "D" Street • San Bernardino • CA 92418-0001
Planning & Building 909.384.5057 • Fax: 909.384.5080
www.sbcity.org

February 16, 2011

Fakhri Manghi, Senior Water Resource Engineer
Western Municipal Water District
14205 Meridian Parkway
Riverside, CA 92518

RE: Riverside-Corona Feeder Realignment Project Draft SEIR (SCH #2003031121)

Dear Mr. Manghi:

Thank you for the opportunity to comment on the Supplemental EIR/EIS. The traffic safety mitigation measures address the concerns raised by our department in response to the Notice of Preparation in 2008. This project will impact Orange Show Road, a major arterial in the City of San Bernardino, and the plan to bore under I-215 will require a significant staging/work area. Based on the planned commencement and phasing of construction, work within the City of San Bernardino will begin in approximately 2023. Please keep the city Public Works and Community Development Departments apprised of the progress of the project and contact the City well in advance of this phase of construction, to coordinate with improvement and maintenance plans for Orange Show Road and Auto Plaza Drive, and to obtain approval of the traffic safety plan, encroachment permits, and potentially a temporary use permit for the boring project.

The City of San Bernardino Municipal Water Department will respond separately to address issues of water storage and withdrawal from the San Bernardino Basin Area. If you have any questions, please contact me at (909) 384-5057 ext. 3330.

Sincerely,

Terri Rahhal
City Planner

cc: Public Works Department

California Natural Resources Agency
DEPARTMENT OF FISH AND GAME
http://www.dfg.ca.gov
Inland Deserts Region
3602 Inland Empire Blvd., Suite C-200
Ontario, CA 91764
(909) 484-0167

JERRY BROWN, Governor
JOHN MCCAMMAN, Director

RECEIVED
MAR 07 2011
Water Resources

March 3, 2011

Mr. Jack Safely
Western Municipal Water District
14205 Meridian Parkway
Riverside, CA 92518

Re: Subsequent Environmental Impact Report for the Riverside-Corona Feeder
Riverside and San Bernardino Counties -- SCH # 2003031121

Dear Mr. Safely:

The Department of Fish and Game (Department) appreciates this opportunity to comment on the Subsequent Environmental Impact Report for the Riverside-Corona Feeder The Department is responding as a Trustee Agency for fish and wildlife resources [Fish and Game Code sections 711.7 and 1802 and the California Environmental Quality Act Guidelines (CEQA) section 15386] and as a Responsible Agency regarding any discretionary actions (CEQA Guidelines section 15381), such as a Lake and Streambed Alteration Agreement (Section 1600 *et seq.*) or a California Endangered Species Incidental Take Permit (Fish and Game Code Sections 2080 and 2080.1).

For this project the Department will be acting as a Trustee and Responsible Agency. As per Section 15096 of the California Environmental Quality Act statute, as a Responsible Agency the Department is obligated to focus its comments on any shortcomings in the CEQA document, the appropriateness of the CEQA document utilized, and additional alternatives or mitigation measures which the CEQA document should include.

The site is located in the County of Riverside and County of San Bernardino, in the cities of San Bernardino, Colton, and City of Riverside.

The 28-mile long water pipeline would collect water from the San Bernardino basin area and the Chino Basin. Imported water would be recharged into the Basin area. The project components are the 78 inch pipeline, 20 new or existing groundwater wells, groundwater treatment facilities, water storage, pumping facilities and recharge basins. The system is designed to deliver a maximum of 40,000 acre-feet per year, although deliveries are expected to be between 6,000 and 9,000 acre-feet per year.

MSHCP

The project is located partially within the boundary of the Western Riverside Multiple Species Habitat Conservation Plan (MSHCP) and is subject to the provisions and policies of

that plan. The MSHCP is a Natural Communities Conservation Plan that provides coverage for 146 species and up to 510,000 acres. Participants in the MSHCP are issued take authorization for covered species and do not require Federal or State Endangered Species Act Permits. The plan also has requirements for species with additional survey/conservation requirements. These include fourteen (14) Narrow Endemic Plant Species, thirteen (13) Criteria Area Plant Species, seven (7) animals with specific survey area requirements, six (6) species associated with riparian/riverine areas and vernal pool habitats, and an additional 28 species deemed not yet adequately conserved.

The project alignment goes through the Jurupa Area Plan of the MSHCP, specifically Critera Area Cell Numbers 22, 55, and 617. Portions of the project also occur within the Narrow Endemic Plant Species Survey Area, as well as the survey area for the western burrowing owl.

The DEIR should specify whether the project will obtain take in Riverside County through the Multiple Species Habitat Conservation Plan as a Participating Special Entity or will need to obtain take through a CESA permit.

Should the applicant choose not to process the development project through the MSHCP for covered species, then the project is subject to the Federal Endangered Species Act and/or the California Endangered Species Act (CESA) for threatened and endangered species. A CESA Permit must be obtained if the project has the potential to result in "take" of species of plants or animals listed under CESA, either during construction or over the life of the project. CESA Permits are issued to conserve, protect, enhance, and restore State-listed threatened or endangered species and their habitats. The Department's CESA Incidental Take Permit state that a project must fully minimize and mitigate impacts to State-listed resources.

San Bernardino County does not have an approved multi-species plan and therefore any take of State-listed endangered or threatened species requires a California Endangered Species Act Incidental Take Permit (CESA ITP). Any take of a federally-listed endangered or threatened species requires compliance with the Federal Endangered Species Act.

Recommendations

Per section 15096 of the CEQA statute, as a Responsible Agency the Department is obligated to focus its comments on any inadequacies of the CEQA document and additional alternatives or mitigation measures which should be included in the CEQA document. As a Responsible Agency the Department will be obligated to consult the final CEQA document to prepare a Lake and Streambed Alteration Agreement or a California Endangered Species Incidental Take Permit. If the final CEQA document fails to identify and adequately mitigate all of the impacts of the proposed project and any alternatives, the project proponents will be required to reinitiate the CEQA process at their expense, or fund another CEQA process under the direction of the Department to identify and adequately mitigate all impacts associated with any Department discretionary actions.

The Department recommends that the Lead Agency clarify the issues raised below and provide a response to these comments in the Final Environmental Impact Report (FEIR) or subsequent CEQA document. The problem with this project is that the direct and indirect

impacts from construction are not known because this analysis depends upon the timing of construction (nesting and breeding avoidance), the presence of threatened or endangered species as determined by future protocol surveys, and the choice of construction methodology (micro-tunneling or trenching). Therefore, the Department cannot issue a California Endangered Species Act Incidental Take Permit or 1600 Lake and Streambed Alteration Agreement based upon the information contained in this document. For this reason future CEQA processing will be required by the Department for projects where it has Responsible Agency authority.

1. Up-to-date biological surveys (within one year), including protocol surveys for listed species. Surveys should be conducted prior to the commencement of construction;
2. An analysis of direct and indirect, temporary and permanent impacts to sensitive biological resources (least Bell's vireo, California coastal gnatcatcher, arroyo toad, Delhi sands flower-loving fly, Santa Ana sucker and southwestern willow flycatcher);
3. A monitoring and maintenance plan for revegetated or created native habitat areas;
4. Mitigation measures or project changes to offset the loss of riparian habitat, listed riparian species and designated species of special concern;
5. A detailed jurisdictional delineation of State Waters to identify and analyze direct, indirect, temporary and permanent impacts;
6. Submittal of a 1600 Lake or Streambed Alteration Agreement Notification form for impacts to State jurisdictional waters;
7. An analysis of impacts to federal critical habitat and potential impacts to federally listed species;
8. Mitigation for the loss of critical habitat and/or impacts to federally listed species;
9. Submittal of a California Endangered Species Act Incidental Take Permit if future protocol surveys find there will be take of these species;
10. The location and number of new wells and an assessment of potential impacts to the groundwater basins and native vegetation from these wells.

Biological Resources

General reconnaissance surveys and habitat assessments were conducted on June 9, July 28, and July 30, 2008. Future biological assessments or updates will have to be conducted and should be timed to coincide with protocol surveys (if required) to avoid time delays and the need to repeat surveys. Much of the project will be constructed within existing road right-of-ways.

The biological report breaks the project down into four alignments: northern reach, central reach, combined alignment, and Monroe Street alignment. On-site habitats include Riversidean sage scrub, perennial streambed, freshwater marsh, non-native grasslands, agricultural, orchard, southern willow scrub and mulefat scrub.

The central reach includes 13.1 acres of riparian habitat that has the potential to support least Bell's vireo, southwestern willow flycatcher, and Santa Ana sucker. The northern reach includes 70 acres of mapped Delhi Sands habitat, potentially containing the Delhi sands flower-loving fly. The northern reach has 7 acres of coastal sage scrub.

Twenty-five special-status animal species have the potential to occur along the project alignment. These include the following federally listed species: coastal California gnatcatcher, Delhi sands flower-loving fly, least Bell's vireo (also State listed), Santa Ana sucker and southwestern willow flycatcher (also State listed). Other potential species are: American badger, arroyo chub, burrowing owl, San Diego horned lizard, golden eagle, loggerhead shrike, Los Angeles pocket mouse, northwestern San Diego pocket mouse,, orange-throated whiptail, Santa Ana speckled dace, southern grasshopper mouse, southwestern pond turtle, two-striped garter snake, western yellow-billed cuckoo, yellow-breasted chat, white-tailed kite, northern red-diamond rattlesnake, San Diego black-tailed jackrabbit, and yellow warbler.

The document states that prior to disturbance in DSFL habitat an assessment will be made as to whether protocol surveys are warranted. Prior to construction within 500 feet of gnatcatcher habitat protocol surveys will be conducted to determine if gnatcatcher are present. Construction in least Bell's vireo, southwestern willow flycatcher and arroyo toad habitat are proposed to occur outside of the nesting/breeding season and the document states that a habitat mitigation and monitoring program (HMMP) would be developed for revegetation of habitat. The document also proposes that if the project involves direct impacts to Santa Ana sucker occur, focused surveys for this species would be required.

Therefore, direct and indirect impacts on these State and Federal endangered or threatened species will not be known until construction is commenced, at which time consultations with CDFG or the United States Fish and Wildlife Service will occur. The California Endangered Species Act (CESA) requires that Impacts to State-listed endangered or threatened species be minimized or fully mitigated.

There are several issues that are of concern to the Department. First, if the applicant chooses not to process the project through the MSHCP (in Riverside County), a CESA ITP may be required. If State-listed endangered or threatened species are impacted in San Bernardino County, a CESA ITP will be required. The criteria defining the requirements for a CESA ITP are found in Title 14 CCR, Sections 783.4(a) and (b). These require that the take is incidental to an otherwise lawful activity, the impacts of the take are minimized and fully mitigated, the measures to minimize and fully mitigate impacts are roughly proportional to the impact on the species, maintain the applicant's objectives to the greatest degree possible, and are capable of successful implementation. This section also requires that adequate funding is provided to implement the mitigation measures and that issuance of an ITP will not jeopardize the continued existence of a State-listed species.

If these requirements regarding State-listed endangered or threatened species are not satisfied prior to approval of the Final Environmental Impact Report (FEIR), then a subsequent CEQA document must be prepared so that it can be reviewed by the public and comply with the Department's duties as a Responsible Agency under CEQA.

If the project involves the take of a Federal threatened or endangered species the project applicant will have to consult with the United States Fish and Wildlife Service (Service). If the impacts and mitigation from the Service are not included in the CEQA document, a subsequent CEQA document will have to be prepared and reviewed by the Department.

Secondly, if the pipeline route adversely impacts Federally-designated Critical Habitat or habitat for State species of special concern, mitigation must be provided for these as well.

Streambed Alteration Agreements and CEQA

The pipeline route crosses the Santa Ana River, Spring Brook Wash and Mockingbird Canyon. Potential losses of habitats and direct impacts on species were not included in the document because the applicant is proposing to use micro-tunneling techniques to cross waterways. However, if this method was is not deemed feasible, the document states that trenching will have to be done. Trenching would involve direct and indirect impacts to streambeds, open water and associated riparian vegetation.

The document states that impacts due to micro-tunneling would be minor and temporary, involving stress, desiccation and potential defoliation effects on riparian vegetation. Direct and indirect, temporary or permanent impacts to State jurisdictional waters are not identified in the document.

Boring and jacking activities can result in frac-outs, thereby impacting the creek and its associated habitat. Frac-outs commonly occur during directional drilling under streams and in many cases frac-outs have caused harm to sensitive aquatic resources. The Department agrees impacts would be reduced by boring instead of trenching; however, impacts may still occur. The Department requires that the document include clean-up procedures in case of frac-outs during boring.

If the CEQA documents do not fully identify potential impacts to lakes, streams, and associated resources and provide adequate avoidance, mitigation, monitoring, funding sources, a habitat management plan and reporting commitments, additional CEQA documentation will be required prior to execution (signing) of the Agreement. In order to avoid delays or repetition of the CEQA process, potential impacts to a stream or lake, as well as avoidance and mitigation measures need to be discussed within this CEQA document.

The Department opposes the elimination of drainages, lakes and their associated habitats. The Department recommends avoiding the stream and riparian habitat to the greatest extent possible. Any unavoidable impacts need to be compensated with the creation and/or restoration of in-kind habitat either on-site or off-site at a minimum 3:1 replacement-to-impact ratio, depending on the impacts and proposed mitigation. Additional mitigation requirements through the Department's Streambed Alteration Agreement process may be required depending on the quality of habitat impacted, proposed mitigation, project design, and other factors.

We recommend submitting a notification early on, since modification of the proposed project may be required to avoid or reduce impacts to fish and wildlife resources. To obtain a Streambed Alteration Agreement notification package, please call (562) 430-7924.

The following information will be required for the processing of a Streambed Alteration Agreement and the Department recommends incorporating this information to avoid subsequent CEQA documentation and project delays:

1) Delineation of lakes, streams, and associated habitat that will be temporarily and/or permanently impacted by the proposed project (include an estimate of impact to each habitat type);
2) Discussion of avoidance measures to reduce project impacts; and,
3) Discussion of potential mitigation measures required to reduce the project impacts to a level of insignificance.

Section 15370 of the CEQA guidelines includes a definition of mitigation. It states that mitigation includes:

1) Avoiding the impact altogether by not taking a certain action or parts of an action,
2) Minimizing impacts by limiting the degree or magnitude of the action and its implementation,
3) Rectifying the impact by repairing, rehabilitating, or restoring the impacted environment,
4) Reducing or eliminating the impact over time by preservation and maintenance operations during the life of the action,
5) Compensating for the impact by replacing or providing substitute resources or environments.

In the absence of specific mitigation measures in the CEQA documents, the Department believes that it cannot fulfill its obligations as a Trustee and Responsible Agency for fish and wildlife resources. Permit negotiations conducted after and outside of the CEQA process deprive the public of its rights to know what project impacts are and how they are being mitigated in violation of CEQA Section 15002. Also, because mitigation to offset the impacts was not identified in the CEQA document, the Department does not believe that the Lead Agency can make the determination that impacts to jurisdictional drainages and/or riparian habitat are "less than significant" without knowing what the specific impacts and mitigation measures are that will reduce those impacts.

Thank you for this opportunity to comment. Please contact Robin Maloney-Rames at (909) 980-3818, if you have any questions regarding this letter.

Sincerely,

Robin Maloney-Rames

for Jeff Brandt
Senior Environmental Scientist

dc: State Clearinghouse

CITY OF
RIVERSIDE

Community Development
Department
Planning Division

March 8, 2011

Jack Safely, P.E.
Western Municipal Water District
450 East Alessandro Blvd.
Riverside, CA 92508

SUBJECT: NOTICE OF AVAILABILITY OF A DRAFT SUPPLEMENTAL ENVIRONMENTAL IMPACT REPORT (DSEIR) AND EVIRONMENTAL IMPACT STATEMENT (EIS) FOR THE RIVERSIDE CORONA FEEDER PIPELINE REALIGNMENT.

Dear Mr. Safely:

Thank you for the opportunity to review and comment on the DSEIR for the proposed Riverside Corona Feeder (RCF) Pipeline Realignment project. As indicated in the project description, the Western Municipal Water District is proposing to build the Riverside-Corona Feeder Project which includes a 28-mile large-capacity water pipeline ranging in diameter up to 78-inches, up to 20 new and existing wells, and appurtenant facilities associated with aquifer storage and recovery. The project, which includes federal funding through the Bureau of Reclamation, is intended to deliver water from the Bunker Hill groundwater basin in San Bernardino County to communities throughout western Riverside County.

Pipeline Description

The proposed "Central Reach" segment of pipeline (the segment within the City of Riverside) is proposed to be a maximum 54-inch diameter pipeline and includes two proposed alignment options (the Jackson Street Option and the Monroe Street Option).

Jackson Street Option - The Jackson Street Option crosses under the Santa Ana River along the east side of Van Buren Boulevard. South of the Santa Ana River, the alignment crosses under Van Buren Boulevard to Doolittle Avenue and then to Van Buren Boulevard and continues south in Van Buren Boulevard. The alignment then traverses southeast in Jackson Street, west in Diana Avenue to Wilbur Street, then south under State Route 91 (SR91). South of SR91, the alignment continues northeast in Indiana Avenue, then southeast in Jackson Street, and finally connects to the approved RCF alignment near the intersection of Jackson and Cleveland Streets.

Monroe Street Option – The Monroe Street option would follow the above-described alignment from Van Buren Boulevard southeast in Jackson Street only to Colorado Avenue. At that point, the alignment will continue northeast in Colorado Avenue to Monroe Street, then southeast in Monroe

Street, under the State Route 91, and continue to the intersection of Monroe Street and Cleveland Avenue.

Boring techniques will be used to cross under several locations within the City including the Santa Ana River, Van Buren Boulevard near Jurupa Avenue, the intersection of Van Buren Boulevard and Arlington Avenue, State Route 91, the Riverside Canal. City staff has reviewed the DSEIR for the project and offers the following comments:

Water/Water Quality - The City of Riverside Public Utilities Department (RPU) – Water Division is concerned that the proposed project will have a significant impact to groundwater supplies as a result of the potential groundwater extraction. Page 3.0-11 of the DSEIR analyzes 20 wells, and Page 3.0-12 analyzes extractions up to 40,000 acre feet per year (AFY), and an average of 17,500 AFY. Elsewhere in the document, the project is analyzed to flow 45,000 gallons per minute (gpm), which is more than 72,000 AFY. As a result, the project description is confusing and misleading. The project description must be revised to clearly and unambiguously state the number of wells actually analyzed, and the maximum number of wells possible under the project; the annual extractions actually analyzed, and the maximum annual extractions possible under the project.

What is even more misleading is that extraction volumes analyzed in the DEIR far exceed the volumes represented by Western Municipal Water District (Western) at a December 6, 2010, Project update to the Basin Technical Advisory Committee (BTAC). During that update, Western represented annual extraction to be in the 6,000 to 9,000 acre-foot per year (AFY) range. Subsequently, the minutes of the BTAC meeting represent only 5 wells producing 10,000 to 15,000 AFY. The project represented at the BTAC meeting as and in the minutes is substantially downsized from prior versions of the project with 20 wells, yet the DSEIR remains unchanged and the anticipated pumping rates discussed in the Draft Environmental Impact Report conflict significantly with the values represented at the BTAC as well as those represented in subsequent BTAC minutes.

The project represented in DSEIR as it currently exists will have a significant unmitigated impacts on groundwater levels due to substantial depletion of groundwater supplies and will interfere substantially with groundwater recharge such that there is a net deficit in aquifer volume and lowering of the groundwater table level as the project has the potential to extract and convey far more water than can be supported. Western does not have access to 40,000 AFY of imported water volumes to recharge. The DSEIR must identify and analyze the source of that 40,000 AFY of water, and the associated impacts. An extraction volume of 40,000 AFY (average year) is approximately 20 percent of the basin safe yield. Moving that proportion of water must be studied in much more detail. It will have significant impacts on existing production volumes and rates.

In addition, the DSEIR cannot rely upon the current San Bernardino Basin Area (SBBA) basin model. The recently completed peer review of the model identified errors in model parameters in parts of the basin, causing errors in the model output. For example, the existing model shows high groundwater condition in the foothills, and not in the historical high groundwater areas.

All of RPU's Gage wells are located downstream of the recently identified Project well locations, which are in a position to intercept water recharged in the Santa Ana River Spreading Grounds.

During the dry years, less groundwater will reach RPU wells. The DSEIR must analyze the impacts to existing wells and groundwater supplies, at the maximum Project capacity. The maximum extraction capacity analyzed must be 72,000 AFY, the pipeline carrying capacity.

The DSEIR does not evaluate potential impacts to Total Dissolved Solids (TDS) concentrations in the City's sewage treatment plant effluent. Substantial volumes of imported water with higher TDS recharged in the SBBA basin will increase TDS levels in RPU groundwater supplies. TDS increases in the water supply may force the City and others to desalt effluent at substantial cost to avoid a National Pollutant Discharge Elimination System (NPDES) permit violation.

The proposed Project will be using the existing recharge facilities in SBBA to recharge the imported water. Most of the imported water available for recharge is available during the wet years. During the wet years, the existing recharge facilities are fully utilized for re-charging of local waters and San Bernardino Valley Municipal Water District's (SBVMWD's) imported water State Water Project's (SWP) Table A allocation required to maintain the basin Safe Yield. The proposed Project by Western may need new recharge facilities to implement the Project. The DSEIR must consider and analyze those new facilities, and may not defer that analysis until SWP conditions meet the Project capacity. The Project impacts must be analyzed now, at the maximum capacities, at maximum Project construction to enable those capacities. To do otherwise is impermissible segmentation of the Project to avoid finding impacts.

Either the Project must be physically downsized to the 6,000-9,000 AFY which has recently been represented, or the 10,000-15,000 AFY actually analyzed; or, the environmental analysis must be revised to fully analyze, address and mitigate the Project's actual capacities at build out, including 72,000 AFY of water flow through the proposed pipeline, and where that water will come from, and the impacts of providing that water.

Traffic - The Traffic Impact Analysis (TIA) of the DEIR does not identify detour routes or analyze potential impacts to "nearby" streets affected by the road closures and/or detours. Detours along Jackson and Monroe Streets may impact residential streets which are not designed to accommodate large number of vehicles or truck traffic for extended periods of time. Without further analysis of impacts related to traffic and traffic hazards, noise, and air quality as a result of detours through residential areas, the EIR fails to show that the potential impacts to residences (sensitive receptors) will be less than significant. The DEIR needs to analyze the impacts of detours on residential areas and identify appropriate mitigation measures where needed to reduce impacts a less than significant level. The preferred mitigation is to require that detours avoid residential streets and restrict detour traffic via Van Buren Boulevard or Monroe Street with the Jackson Street Alignment or via Jackson Street or Adams Street with the Monroe Street Alignment. Impacts to residents as a result of detours need to be fully mitigated and appropriate mitigation identified.

Additional City Public Works Department Requirements for work in City Streets

The City's Public Works Division's preferred alignment is the Monroe Street alignment. Prior to construction, a traffic control plan shall be submitted to the City Public Works Department for review and approval for all construction work within City Limits. The prospective traffic control plan needs to adequately address the following concerns:

- Avoid detouring traffic through residential neighborhoods and streets.

- Where residential or collector streets are affected, the traffic control plan must require rehabilitation of damage caused to residential and collector streets during the construction.

- Avoid loss of signal detection loops (for traffic signals) at intersections during construction.

- Per Figure 1-A of the TIA, Typical Open Trench Detail, shows that the open trench width will be Pipe Diameter (54-inch diameter) + 40 inches for a total open trench width of 94 inches. The City requires that all travel lanes on Van Buren be opened during non-working hours which means that the contractor will need to provide "steel plate bridging". The City will require a structural design prepared by a Civil Engineer where the span exceeds the maximum, allowable non-engineered span of 63 inches. The City Public Works Department will not allow long term lane closures on Van Buren.

- The traffic control plan needs to determine if Jackson or Monroe Streets will also have "steel plate bridging" during non-working hours or whether the contractor will be closing the lanes or roadway with long term traffic control devices such as k-rail.

- The Contractor needs to provide language in the project specifications to ensure the red light enforcement system at Van Buren at Arlington is not impacted. If the contractor anticipates impacts to the system they need to discuss those impacts with the Public Works Department. The Public Works Department will need to review the plans, impacts, duration of impacts, and provide specification language to minimize red light enforcement shutdowns during the pipe installation.

- The project needs to clarify the work hours especially for segments or intersections shown not to be impacted during peak traffic hours. The City needs to know if the proposed work hours will be from 9:00 a.m. to 3:30 p.m. or whether night work is proposed since nighttime construction activities may impact local residential neighborhoods (noise levels may be an issue).

Noise - Because detour routes have not been identified, the noise analysis has not adequately analyzed or mitigated impacts to sensitive receptors as a result of added traffic noise from detouring traffic including truck traffic onto residential streets. In addition, Mitigation Measure Noise 1 states that: "

"A minimum of 30 days prior to commencement of construction projects for all reaches and facilities, Western shall identify all noise-sensitive receptors (e.g., residential dwellings, hotels, hospitals, nursing homes, schools and libraries) within one-quarter mile of the active construction area. If construction is planned to occur within a quarter mile of a sensitive receptor, the hours of construction shall be limited to those that would cause the least noise disruption to sensitive uses and in consultation with the local jurisdiction. Mitigation could include such approaches as:

- *Allowing nighttime construction in commercial/industrial areas or adjacent to schools which operate only during the day.*
- *Prohibiting nighttime construction in residential areas.*
- *Time of year construction, such as during a school holiday week.*
- *If more than one sensitive receptor that might warrant opposite approaches to hours of operation is affected by the same construction location, the hours of construction allowed by local jurisdictions regulations shall apply."*

Because it is unknown at this time where traffic detours and construction will specifically occur in relation to sensitive receptors, the level of impact will be on sensitive receptors has not been fully analyzed. In addition, MM Noise 1 only identifies mitigation that could be, rather than mitigation that shall be required. Therefore, the DSEIR has not demonstrated that the mitigation measures will reduce impacts to a less than significant level, and the DSEIR inappropriately defers analysis and specific mitigation measures for noise impacts. Further analysis and more specific mitigation measures are needed to adequately address noise impacts.

Once again thank you for the opportunity to comment on the project. We look forward to continued communication and coordination on this project. Should you have any questions regarding this letter, please feel free to contact Doug Darnell, Senior Planner at (951) 826-5219 or ddarnell@riversideca.gov.

Sincerely,

Ken Gutierrez, AICP
Planning Director

c: Ronald Loveridge, Mayor
Riverside City Council Members
Brad Hudson, City Manager
Belinda Graham, Assistant City Manager
Kristi Smith, Supervising Deputy City Attorney
Scott Barber, Community Development Director
Siobhan Foster, Public Works Director
Tom Boyd, Deputy Public Works Director/City Engineer
Steve Libring, Traffic Engineer
David H. Wright, Public Utilities General Manager
Kevin Milligan, Utilities Assistant General Manager/Water
Gary Nolff, Utilities Assistant General Manager/Resources
U.S. Department of Interior, Bureau of Reclamation 27708 Jefferson Ave. #202 Temecula, CA 92590

South Coast
Air Quality Management District
21865 Copley Drive, Diamond Bar, CA 91765-4182
(909) 396-2000 • www.aqmd.gov

E-mailed: March 8, 2011 March 8, 2011
fmanghi@wmwd.com

Mr. Fakhri Manghi
Western Municipal Water District
14205 Meridian Parkway
Riverside, CA 92518

Review of the Supplemental Environmental Impact Report (Supplemental EIR) for the Riverside-Corona Feeder Realignment Project

The South Coast Air Quality Management District (AQMD) appreciates the opportunity to comment on the above-mentioned document. The following comment is intended to provide guidance to the lead agency and should be incorporated into the final Environmental Impact Report (EIR) as appropriate.

Based on a review of the draft EIR the AQMD staff is concerned about the significant construction-related air quality impacts from the proposed project. In order to reduce regional air quality impacts, AQMD staff recommends that the lead agency require additional mitigation to reduce diesel equipment exhaust emissions during construction activities.

Pursuant to Public Resources Code Section 21092.5, please provide the AQMD with written responses to all comments contained herein prior to the adoption of the final EIR. Further, staff is available to work with the lead agency to address these issues and any other questions that may arise. Please contact Dan Garcia, Air Quality Specialist CEQA Section, at (909) 396-3304, if you have any questions regarding the enclosed comments.

Sincerely,

Ian MacMillan
Program Supervisor, CEQA Inter-Governmental Review
Planning, Rule Development & Area Sources

Attachment

IM:DG

RVC110121-03
Control Number

Construction Mitigation Measures

1. Given that the lead agency's regional and localized construction air quality analysis demonstrates that the criteria pollutant emissions will exceed the AQMD's daily significance thresholds for NOX, PM10 and PM2.5 for each of the proposed project alternatives the lead agency should consider adding the following mitigation measures to further reduce air quality impacts from the project, if feasible:

    - Configure construction parking to minimize traffic interference,
    - Provide dedicated turn lanes for movement of construction trucks and equipment on- and off-site,
    - Reroute construction trucks away from sensitive receptor areas,
    - Improve traffic flow by signal synchronization,
    - Ensure that all vehicles and equipment will be properly tuned and maintained according to manufacturers' specifications,
    - Consistent with measures that other lead agencies in the region (including Port of Los Angeles and Port of Long Beach) have enacted, require all on-site construction equipment to meet EPA Tier 2 or higher emissions standards according to the following:

        - ✓ April 1, 2010, to December 31, 2011: All offroad diesel-powered construction equipment greater than 50 hp shall meet Tier 2 offroad emissions standards. In addition, all construction equipment shall be outfitted with the BACT devices certified by CARB. Any emissions control device used by the contractor shall achieve emissions reductions that are no less than what could be achieved by a Level 2 or Level 3 diesel emissions control strategy for a similarly sized engine as defined by CARB regulations.

        - ✓ January 1, 2012, to December 31, 2014: All offroad diesel-powered construction equipment greater than 50 hp shall meet Tier 3 offroad emissions standards. In addition, all construction equipment shall be outfitted with BACT devices certified by CARB. Any emissions control device used by the contractor shall achieve emissions reductions that are no less than what could be achieved by a Level 3 diesel emissions control strategy for a similarly sized engine as defined by CARB regulations.

        - ✓ Post-January 1, 2015: All offroad diesel-powered construction equipment greater than 50 hp shall meet the Tier 4 emission standards, where available. In addition, all construction equipment shall be outfitted with BACT devices certified by CARB. Any emissions control device used by the contractor shall achieve emissions reductions that are no less than what could be achieved by a Level 3 diesel emissions control strategy for a similarly sized engine as defined by CARB regulations.

- ✓ A copy of each unit's certified tier specification, BACT documentation, and CARB or AQMD operating permit shall be provided at the time of mobilization of each applicable unit of equipment.

- For additional measures to reduce off-road construction equipment, refer to the mitigation measure tables located at the following website: www.aqmd.gov/ceqa/handbook/mitigation/MM_intro.html.

- The lead agency should consider encouraging construction contractors to apply for AQMD "SOON" funds. As an example, incentives could be provided in the bidding process for those construction contractors who apply for AQMD "SOON" funds. More information on this program can be found at the following website: http://www.aqmd.gov/tao/Implementation/SOONProgram.htm

In addition to the mitigation measures, AQMD staff recommends modifying the existing mitigation measures as follows:

- **MM Air 2:** During construction of the proposed improvements require the use of electricity from power poles rather than temporary diesel or gasoline power generators ~~one of the following options must be used to supply the power needs for boring/tunneling operations: 1) use natural gas fueled generator sets; 2) use low emission, duel fueled generator sets; or 3) prior to construction of the proposed improvements, arrangements will be made with Southern California Edison to provide temporary construction power at the boring/tunneling sites (67 % reduction)~~[1].

DIRECTORS
CLAUDIA C. ALVAREZ, ESQ.
PHILIP L. ANTHONY
DON BANKHEAD
KATHRYN L. BARR
DENIS R. BILODEAU, P.E.
SHAWN DEWANE
CATHY GREEN
IRV PICKLER
STEPHEN R. SHELDON
ROGER C. YOH, P.E.

SINCE 1933

ORANGE COUNTY WATER DISTRICT

ORANGE COUNTY'S GROUNDWATER AUTHORITY

OFFICERS
President
CLAUDIA C. ALVAREZ, ESQ.

First Vice President
PHILIP L. ANTHONY

Second Vice President
DON BANKHEAD

General Manager
MICHAEL R. MARKUS, P.E.

March 8, 2011

Fakhri Manghi
Senior Water Resource Engineer
Western Municipal Water District
14205 Meridian Parkway
Riverside, CA 92518

Dear Mr. Manghi:

RE: Draft Supplemental Environmental Impact Report and Draft Environmental Impact Statement (SEIR/EIS) for the Riverside-Corona Feeder Realignment (State Clearinghouse No. 2003031121)

The Orange County Water District (OCWD) appreciates the opportunity to review and comment on the Draft Supplemental Environmental Impact Report (EIR) and Draft Environmental Impact Statement (SEIR/EIS) for the Riverside-Corona Feeder Realignment.

OCWD was established by the State of California in 1933 to manage the Orange County Groundwater Basin. Water produced from the basin is the primary water supply for approximately 2.5 million residents in Orange County. OCWD maintains and operates facilities in the cities of Anaheim and Orange to recharge Santa Ana River water into the groundwater basin. Santa Ana River baseflows and stormflows provide the majority of the water supply used to recharge the basin.

OCWD requests that the following issue be addressed in the Environmental Impact Report:

The SEIR/EIS states on page 2.0-4 that one of the purposes of the Riverside-Corona Feeder project is to create "opportunities for future use of recycled water for groundwater basin recharge" and on page 3.0-1 one of the project objectives listed is to "leave available the opportunity for future use of recycled water for groundwater basin recharge." We did not observe any description of specific details or projects in the Draft SEIR/EIS regarding future use of recycled water in

PO Box 8300
Fountain Valley, CA 92728-8300
18700 Ward Street
Fountain Valley, CA 92708
(714) 378-3200
(714) 378-3373 fax
www.ocwd.com

relation to the proposed project. Please clarify what is meant by these two statements. Please explain all the anticipated and potential opportunities for future use of recycled water for groundwater basin recharge that may be available due to construction of the Riverside-Corona Feeder project.

We appreciate the opportunity to participate in the environmental review process for the Riverside-Corona Feeder and request that we receive all documents and notices for this proposed project. Thank you.

Sincerely,

Michael R. Markus, P.E.
General Manager

PECHANGA CULTURAL RESOURCES
Temecula Band of Luiseño Mission Indians

Post Office. Box 2183 • Temecula, CA 92593
Telephone (951) 308-9295 • Fax (951) 506-9491

Chairperson:
Germaine Arenas

Vice Chairperson:
Mary Bear Magee

Committee Members:
Evie Gerber
Darlene Miranda
Bridgett Barcello Maxwell
Aurelia Marruffo
Richard B. Scearce, III

Director:
Gary DuBois

Coordinator:
Paul Macarro

Cultural Analyst:
Anna Hoover

Monitor Supervisor:
Jim McPherson

March 8, 2011

VIA E-MAIL and USPS

Mr. Fakhri Manghi
Senior Water Resource Engineer
Western Municipal Water District
14205 Meridian Parkway
Riverside, CA 92518

Re: Pechanga Tribe Comments on the Draft Supplemental EIR/EIS for the Riverside-Coroner Feeder (RCF) Realignment Project, State Clearinghouse No 2003031121, DOI Filing No DES-11-01

Dear Mr. Manghi:

This comment letter is written on behalf of the Pechanga Band of Luiseño Indians (hereinafter, "the Tribe"), a federally recognized Indian tribe and sovereign government. The Tribe formally requests, pursuant to Public Resources Code §21092.2, to be notified and involved in the entire CEQA and NEPA environmental review process for the duration of the above referenced project (the "Project"). If you have not done so already, please add the Tribe to your distribution list(s) for public notices and circulation of all documents, including environmental review documents, archeological reports, and all documents pertaining to this Project. The Tribe further requests to be directly notified of all public hearings and scheduled approvals concerning this Project. Please incorporate these comments into the record of approval for this Project as well.

The Tribe submits these comments concerning the Project's potential impacts to cultural resources in conjunction with the environmental review of the Project and to assist Western Municipal Water District (WMWD) and the US Department of the Interior Bureau of Reclamation (BOR) in preparing appropriate mitigation for the cultural resources that may be discovered during development of this Project.

According to the DSEIR/EIS there are over 200 historic and prehistoric resources identified within a one-mile radius of the APE, and there is at least one Native American cultural resource within one of the proposed Project alignments. The Tribe has previously commented that they are concerned about resources that may be identified during earthmoving activities (DPEIR comments 2004; NOP comments 2008) and continues to express our concern regarding any resources that might be impacted subsurface. Most of the existing APE was constructed many years ago without a Native American observer present and there is the possibility of

cultural and archaeological resources buried under currently paved and landscaped portions of the APE.

WMWD AND THE BOR MUST INCLUDE INVOLVEMENT OF AND CONSULTATION WITH THE PECHANGA TRIBE IN ITS ENVIRONMENTAL REVIEW PROCESS

It has been the intent of the Federal Government[1] and the State of California[2] that Indian tribes be consulted with regard to issues which impact cultural and spiritual resources, as well as other governmental concerns. The responsibility to consult with Indian tribes stems from the unique government-to-government relationship between the United States and Indian tribes. This arises when tribal interests are affected by the actions of governmental agencies and departments. In this case, it is undisputed that the project lies within the Pechanga Tribe's traditional territory. Therefore, in order to comply with CEQA and other applicable Federal and California law, it is imperative that WMWD and the BOR consult with the Tribe in order to guarantee an adequate basis of knowledge for an appropriate evaluation of the Project effects, as well as generating adequate mitigation measures.

PECHANGA CULTURAL AFFILIATION TO PROJECT AREA

The Pechanga Tribe asserts that the portion of the Project APE south of the Santa Ana River is part of Luiseño, and therefore the Tribe's, aboriginal territory as evidenced by the existence of Luiseño place names, *tóota yixélval* (rock art, pictographs, petroglyphs), and village complexes within this area of Riverside County. This culturally sensitive area is affiliated with the Pechanga Band of Luiseño Indians because of the Tribe's cultural ties to this area as well as our history with projects within the area.

The Pechanga Tribe's knowledge of our ancestral boundaries is based on reliable information passed down to us from our elders; published academic works in the areas of anthropology, history and ethno-history; and through recorded ethnographic and linguistic accounts. Many anthropologists and historians who have presented boundaries of the Luiseño traditional territory have included the City of Riverside area in their descriptions (Drucker 1937; Heiser and Whipple 1957; Kroeber 1925; Smith and Freers 1994), and such territory descriptions correspond with what was communicated to the Pechanga people by our elders. While historic accounts and anthropological and linguistic theories are important in determining traditional Luiseño territory, the Pechanga Tribe asserts that the most critical sources of information used to define our traditional territories are our songs, creation accounts, and oral traditions.

---

[1]See e.g., Executive Memorandum of April 29, 1994 on Government-to-Government Relations with Native American Tribal Governments, Executive Order of November 6, 2000 on Consultation and Coordination with Indian Tribal Governments, Executive Memorandum of September 23, 2004 on Government-to-Government Relationships with Tribal Governments, and Executive Memorandum of November 5, 2009 on Tribal Consultation.

[2] See California Public Resource Code §5097.9 et seq.; California Government Code §§65351, 65352.3 and 65352.4

Luiseño history originates with the creation of all things at *'éxva Teméeku*, in the present day City of Temecula, and dispersing out to all corners of creation (what is today known as Luiseño territory). It was at Temecula that the Luiseño deity *Wuyóot* lived and taught the people, and here that he became sick, finally expiring at Lake Elsinore. Many of our songs relate the tale of the people taking the dying *Wuyóot* to the many hot springs at Elsinore, where he died (DuBois 1908). He was cremated at *'éxva Teméeku*. It is the Luiseño creation account that connects Elsinore to Temecula, and thus to the Temecula people who were evicted and moved to the Pechanga Reservation, and now known as the Pechanga Band of Luiseño Mission Indians (the Pechanga Tribe). From Elsinore, the people spread out, establishing villages and marking their territories. The first people also became the mountains, plants, animals and heavenly bodies.

Many traditions and stories are passed from generation to generation by songs. One of the Luiseño songs recounts the travels of the people to Elsinore after a great flood (DuBois 1908). From here, they again spread out to the north, south, east and west. Three songs, called *Monívol*, are songs of the places and landmarks that were destinations of the Luiseño ancestors, several of which are located near the Project area. They describe the exact route of the Temecula (Pechanga) people and the landmarks made by each to claim title to places in their migrations (DuBois 1908:110). Further, the story of *Táakwish* and *Tukupar* includes place names for events from the Idyllwild area to the Glen Ivy/Corona area (Kroeber 1906), which covers the southern portion of the Project area. In addition, Pechanga elders state that the Temecula/Pechanga people had usage/gathering rights to an area extending from Rawson Canyon on the east, over to Lake Mathews on the northwest, down Temescal Canyon to Temecula, eastward to Aguanga, and then along the crest of the Cahuilla range back to Rawson Canyon. The Project area is located within the northeast area of this culturally affiliated territory. The Native American Heritage Commission (NAHC) Most Likely Descendent (MLD) files substantiate this habitation and migration record from oral tradition. These examples illustrate a direct correlation between the oral tradition and the physical place; proving the importance of songs and stories as a valid source of information outside of the published anthropological data.

Tóota yixélval (rock art) is also an important element in the determination of Luiseño territorial boundaries. *Tóota yixélval* can consist of petroglyphs (incised) elements, or pictographs (painted) elements. The science of archaeology tells us that places can be described through these elements. Riverside and Northern San Diego Counties are home to red-pigmented pictograph panels. Archaeologists have adopted the name for these pictograph-versions, as defined by Ken Hedges of the Museum of Man, as the San Luis Rey style. The San Luis Rey style incorporates elements which include chevrons, zig-zags, dot patterns, sunbursts, handprints, net/chain, anthropomorphic (human-like) and zoomorphic (animal-like) designs. Tribal historians and photographs inform us that some design elements are reminiscent of Luiseño ground paintings. A few of these design elements, particularly the flower motifs, the net/chain and zig-zags, were sometimes depicted in Luiseño basket designs and can be observed in remaining baskets and textiles today.

An additional type of *tóota yixélval*, identified by archaeologists also as rock art or petroglyphs, are cupules. Throughout Luiseño territory, there are certain types of large boulders, taking the shape of mushrooms or waves, which contain numerous small pecked and ground indentations, or cupules. Many of these cupule boulders have been identified within a few miles of the Project. Additionally, according to historian Constance DuBois:

> When the people scattered from Ekvo Temeko, Temecula, they were very powerful. When they got to a place, they would sing a song to make water come there, and would call that place theirs; or they would scoop out a hollow in a rock with their hands to have that for their mark as a claim upon the land. The different parties of people had their own marks. For instance, Albañas's ancestors had theirs, and Lucario's people had theirs, and their own songs of Munival to tell how they traveled from Temecula, of the spots where they stopped and about the different places they claimed (1908:158).

Additionally, there are several Luiseño place names that have been recorded within the vicinity the Riverside County portion of the Feeder alignments. These are *Húlvulpa*, *Pochápa* and *Saywaras Pachappa*. *Húlvulpa* refers to an indigenous plant gathering area and is located 200-300 yards south of the Santa Ana River, one mile due west of Mt. Rubidoux, and near Grand Ave. *Pochápa* indicates an event location and *Saywaras Pachappa* is also a traditional gathering location identified where Central Avenue is bisected by Chicago Avenue.

Thus, our songs and stories, our indigenous place names, as well as academic works, demonstrate that the Luiseño people who occupied what we know today as the City of Riverside and unincorporated Riverside County are ancestors of the present-day Luiseño/Pechanga people, and as such, Pechanga is culturally affiliated to that geographic area. As the Tribe has previously stated in correspondence and at meetings, it is not clear that all the Tribes named in MM Cult 2 and MM Cult 2a are actually culturally affiliated to the Project Area.

The Tribe welcomes the opportunity to meet with WMWD and the BOR to further explain and provide documentation concerning our specific cultural affiliation to lands within your jurisdiction.

TRIBAL INVOLVEMENT TO DATE

The Pechanga Tribe has been involved in this Project since the original NOP/IS was issued in 2003. At that time, the Tribe submitted comments and indicated its desire to participate in the Project evaluation process. In 2004, the Tribe submitted comments on the Draft Program Environmental Impact Report, and then spent the next year and a half consulting with WMWD and its consultants to try to develop the Project mitigation and methods for addressing the protection of cultural resources.

When the Final EIR was issued in 2005, it included many of the Pechanga Tribe's suggested revisions. While the final mitigation did not include all of the Pechanga Tribe's requested changes, the Tribe believed that it could continue to work with WMWD and its consultants to continue to address the preservation and protection of cultural resources which may be impacted by the Project. In 2006, the Tribe participated in WMWD's Disposition and Treatment Plan meeting. The Tribe felt that progress was made in these meetings as WMWD agreed to: confer with the interested tribes on the selection of any archaeological monitors used during the Project; consult with the Native American Heritage Commission for determining which tribe was the appropriate tribe to enter into a Treatment and Monitoring Agreement for each Reach of the Project; and to enter into Treatment and Monitoring Agreements with each appropriate tribe.

The Tribe further submitted comments in 2008 on WMWD's Notice of Preparation (NOP) for the Draft Supplemental Program Environmental Impact Report. The Tribe expressed concerns that the current progress on the mitigation measures be continued to the Final SEIR and that the Tribe continue to be included in the archaeological assessments and in developing any new mitigation for the Project. Contrary to these requests, the Tribe was not invited to participate in any of the updated archaeological studies conducted prior to the report completions in 2009. The Tribe was, however, contacted by the archaeological consultants requesting additional information for the new Realignment Alternatives (Clay St, La Sierra and Mockingbird Canyon) and the updated study (SRI 2009).

PROJECT IMPACTS TO CULTURAL RESOURCES

The proposed Project is on land that is within the traditional territory of the Pechanga Band of Luiseño Indians. The Pechanga Band is not opposed to this Project. The Tribe's primary concerns stem from the Project's potential impacts to Native American cultural resources. The Tribe is concerned about both the protection of unique and irreplaceable cultural resources, such as Luiseño village sites, sacred sites and archaeological items which would be displaced by ground disturbing work on the Project, and on the proper and lawful treatment of cultural items, Native American human remains and sacred items likely to be discovered in the course of the work.

The Tribe is in receipt of the January 2011 Draft Supplemental Environmental Impact Report/Environmental Impact Statement (DSEIR/EIS) and archaeological appendices. The southern portion of the proposed Project and the Alternatives are located in a sensitive region of Luiseño territory and the Tribe believes that the possibility for recovering subsurface resources during ground-disturbing activities is high. The Tribe has over thirty-five (35) years of experience in working with various types of construction projects throughout its territory. The combination of this knowledge and experience, along with the knowledge of the culturally-sensitive areas and oral tradition, is what the Tribe relies on to make fairly accurate predictions regarding the likelihood of subsurface resources in a particular location.

The Pechanga Tribe's knowledge of the continuous occupation of the Luiseño people in this geographical area for thousands of years, through their stories and songs, are cultural evidence that subsurface sites may exist in this Project area. The Tribe has expressed concern in the past that cultural resources may be unearthed during construction for the Project. The majority of the roads and landscaped areas were not monitored by an archaeologist or a Native America monitor during their initial construction and thus the extent of subsurface resources within the construction areas is unknown. In fact, many of these areas were never evaluated for cultural resources prior to construction and we have little to no record of the resources that have been impacted by these early construction activities. Since the trenching activities for the pipeline are expected to go quite deep in some places (deeper than prior construction and into native, previously undisturbed soils), the possibility of uncovering deeply buried resources is very high. As such, adequate mitigation is necessary to address the impacts to cultural resources.

We thank WMWD for working with the Tribe to develop mitigation that includes the Tribe. The Tribe would request that WMWD continue to work with the Tribe to assure adequate and enforceable mitigation measures for this Project. Given the sensitivity of the Project area, it is the position of the Pechanga Tribe that Pechanga tribal monitors be required to be present during all ground-disturbing activities conducted in connection with the Project Reaches that are within the Pechanga Tribe's aboriginal territory as discussed previously, including any additional archeological excavations performed.

PROJECT MITIGATION MEASURES

Environmental Impact Reports and any supplemental or subsequent documents must provide adequate protection for significant archaeological and cultural sites and adequately follow the provisions of CEQA and its Guidelines, including Calif. Pub. Res. Code § 21083.2(b) (avoidance as preferred method of preservation of archaeological resources), CEQA Guidelines § 15126.4(b)(3) (agencies should avoid effects on historical resources of archaeological nature), and CEQA Guidelines § 15020 (lead agency responsible for adequacy of environmental documents).

The Tribe has the following comments on the proposed mitigation measures for cultural resources presented in the January 2011 DSEIR/EIS for this Project. We request the existing MM and the edits below be incorporated into the final environmental document.

The Tribe has some specific concerns regarding MM Cult 2. The term Most Likely Descendent (MLD) is a legal term which is utilized under state law only when human remains have been encountered. (See California Public Resources Code Section 5097.98) Therefore, it is legally inaccurate to use the term as it is intended in the mitigation measure. The Tribe had previously suggested that the *concept* underlying the determination of an MLD might be useful in making a determination regarding which tribe is culturally affiliated for each reach for purposes of monitoring. The Tribe further suggested that WMWD consult with the NAHC to request assistance in making that determination. The Tribe believes that WMWD understood the concept as such, but we are now concerned that the wording of the mitigation measure does not

reflect this understanding. As such, the Tribe is providing more detailed comments and revisions to MM Cult 2 as set forth below.

MM Cult 1: (CULT-3) In order to reduce potential significant impacts to historic and non-Native American archaeological and historic resources, full-time archaeological monitoring during excavations shall be conducted in sensitive areas (e.g., near the Santa Ana River crossing, Mockingbird Canyon and La Sierra), within undeveloped areas along the project alignment, at the Gage Canal crossing in the cities of Riverside and Grand Terrace, at the Railroad crossings (AT&SF Railroad Alignment and Southern Pacific Railroad), the Riverside Canal, at Victoria Avenue and Irving Street and within previously undisturbed native soils. The extent and duration of the archaeological monitoring shall be determined by a Riverside County and Secretary of the Interior qualified archaeologist, in consultation with tribal representatives, once the construction schedule is defined for each reach of project construction. In the event of an accidental discovery, the archaeological monitor will comply with State CEQA Guidelines section 15064.5.

MM Cult 1a: (CULT-1) If non-Native American archaeological or historic resources are discovered, the local jurisdiction and land owner where the resources are found will be notified by WMWD. Depending on the nature of the resource, appropriate mitigation and monitoring will be developed by WMWD in conjunction with all affected parties and the on-site archaeologist, and may include such things as:

-Documentation, removal, and curation at a local museum, federal repository or other appropriate steward agency.
-Documentation and retention in place.
-Further detailed archaeological studies to determine the nature and extent of the find.
-Retention by the land owner.
-Other measures agreed upon by the parties involved.

MM Cult 2: (CULT-3) In response to comments from local tribes and to be sensitive to the cultural heritage of the tribes that have claimed an interest in the project area, the ~~archaeological~~ tribal monitoring program shall be executed in conjunction with the ~~tribes~~ archaeological monitoring program. The tribes shall ~~to~~ assist in determining which areas of the project alignment are in sensitive locations and where undisturbed soils will be excavated. Such areas will include, at a minimum: the Santa Ana River (San Bernardino County), ~~and~~ Springbrook Wash (Riverside County and City) crossings, ~~and~~ a natural area near Irving and Firethorn Streets (Mockingbird Canyon area) in the City of Riverside, and the La Sierra area. Prior to grading, WMWD shall enter into a Treatment and Monitoring Agreement for one paid monitor for each Reach of project construction with the culturally affiliated tribe, as determined by WMWD, where undisturbed native soils will be affected and/or sensitive resources are likely.

WMWD may seek the assistance of the Native American Heritage Commission (NAHC) in making the determination of cultural affiliation. ~~Prior to grading, WMWD shall contact the Native American Heritage Commission (NAHC) to determine the Most Likely Descendent (MLD)[3] within any given Reach where the pipeline is to be constructed. WMWD shall enter into a pre-excavation agreement for one paid monitor with the Native American tribe identified by the NAHC as the MLD for each Reach of project construction where undisturbed native soils will be affected and sensitive resources are likely. In the event of an accidental discovery, the archaeological monitor will comply with State CEQA Guidelines section 15064.5.~~ To respond to the expressed desire of each tribe to monitor construction in sensitive areas and in the spirit of interagency cooperation, the Pechanga, ~~Ramona~~, and San Manuel bands shall be notified by WMWD, prior to excavation activities.

MM Cult 2a: Additional tribes responded during the archaeological surveys performed for the Realignment Alternatives. To respond to the expressed desire of these additional tribes to monitor construction in sensitive areas and/or be consulted if finds are made, and in the spirit of interagency cooperation, the Morongo Band of Mission Indians, Soboba Band of Luiseno Indians and ~~Gabrieleno/Tongva San Gabriel Band of Mission Indians~~ shall be notified by WMWD, prior to excavation Activities

MM Cult 3: (CULT-1) To ensure the proper disposition of cultural resources of interest to the tribes uncovered during excavation for the installation of the RCF Project, WMWD shall seek input from the tribes to develop a plan for such dispersal that encompasses the tribes' desired treatment and disposition of Native American cultural resources, including human remains. After considering the tribes' input and recommendations, WMWD shall approve and finalize such a plan prior to grading. In the alternative, WMWD may chose to negotiate treatment and disposition within the Treatment Agreements entered into with the MLD/appropriate tribe for each Reach. WMWD shall follow either the Plan or the Treatment Agreement for resources found on WMWD lands. Further, WMWD shall agree to present the plan and encourage land owners to follow the plan if cultural resources of interest to the tribes are found on land not owned by WMWD.

MM Cult 5: (CULT-2) If human remains are uncovered at any time, all activities in the area of the find shall be halted by WMWD or its contractor and the County Coroner shall be notified immediately pursuant to CA Health & Safety Code Section 7050.5 and CA PRC Section 5097.98. If the Coroner determines that the remains are of Native American origin, the Native American Heritage Commission (NAHC) shall be notified by the Coroner. The NAHC will determine and notify the Most Likely Descendent

[3] As noted previously, the term Most Likely Descendent (MLD) is a term used for a very specific statutory purpose and is therefore not appropriate in this instance. (California Public Resources Code Section 5097.98)

(MLD). The MLD shall be allowed to inspect the site of the discovery. The MLD shall complete the inspection and make recommendations for treatment within ~~24~~ 48 hours of notification by the NAHC.

MM Cult 5a: If a sacred site is encountered within the project alignment, WMWD will work with the tribes to avoid the site, if feasible.

The Tribe reserves the right to fully participate in the environmental review process, as well as to provide further comment on the Project's impacts to cultural resources and potential mitigation for such impacts. Further, the Tribe reserves the right to participate in the regulatory process and provide comment on issues pertaining to the regulatory process and Project approval.

The Pechanga Tribe looks forward to continuing working together with MWMD in protecting the invaluable Pechanga cultural resources found in the Project area. Please contact me at 951-308-9295 X8104 if you have any comments or concerns. Thank you.

Sincerely,

Anna Hoover
Cultural Analyst

Cc Pechanga Office of the General Counsel
Brenda Tomaras, Tomaras & Ogas, LLP
Cathy Perring, Webb & Associates

CITY OF SAN BERNARDINO
MUNICIPAL WATER DEPARTMENT

BOARD OF WATER COMMISSIONERS

TONI CALLICOTT
President

Commissioners
B. WARREN COCKE
NORINE I. MILLER
LOUIS A. FERNANDEZ
WAYNE HENDRIX

STACEY R. ALDSTADT
General Manager
ROBIN L. OHAMA
Deputy General Manager
MATTHEW H. LITCHFIELD, P.E.
Director of Water Utility
JOHN A. CLAUS
Director of Water Reclamation
DON SHACKELFORD
Director of Finance
VALERIE HOUSEL
Director of Environmental &
Regulatory Compliance

"Trusted, Quality Service since 1905"

March 1, 2011

Mr. Fakrhi Manghi
Senior Water Resource Engineer
Western Municipal Water District
14205 Meridian Parkway
Riverside, CA 92518

Dear Mr. Manghi:

RE: RIVERSIDE-CORONA FEEDER REALIGNMENT/DRAFT SUPPLEMENTAL ENVIRONMENTAL IMPACT REPORT

The San Bernardino Municipal Water Department (Department) has reviewed the Draft Supplemental Environmental Impact Report (SEIR) for the proposed realignment of the Riverside-Corona Feeder. The Department previously submitted correspondence on April 25, 2003 in response to the Notice of Preparation of a Draft Program EIR for the project. In its 2003 correspondence, the Department identified specific concerns regarding hydrologic impacts, basin management, project impact on the Newmark Groundwater Remediation project, and others. Since submission of its 2003 comments, significant developments have occurred within the Upper Santa Ana River Watershed and Bunker Hill Basin Area. These developments include the 2007 adoption of the Upper Santa Ana River Integrated Regional Water Management Plan (IRWMP), and the 2010 Institutional Controls Groundwater Management Program Agreement (ICGMP) between the Department and other agencies regarding the Department's Newmark Groundwater Contamination Remediation project.

In light of the basin management provisions and policies established by these documents, the Department believes that the SEIR has addressed most of the Department's comments as provided in its 2003 comment letter. However, the Department does have several specific concerns regarding the project and SEIR, as follows:

- **Conjunctive Use of San Bernardino Basin Area** – The SEIR outlines the institutional framework established by the 1969 Western Judgment (Riverside County Superior Court Case No. 78426), including the role and obligations of the Watermaster. While the

300 North "D" Street, San Bernardino, California 92418 P.O. Box 710, 92402 Phone: (909) 384-5141
FACSIMILE NUMBERS: Administration: (909) 384-5215 Engineering: (909) 384-5532 Customer Service: (909) 384-7211
Corporate Yards: (909) 384-5260 Water Reclamation Plant: (909) 384-5258

Department is supportive of the regional basin management process established in the IRWMP, it remains concerned about the absence of a conjunctive use policy for managing imported and exported supplies, and lack of rules for storage of such supplies in the Basin. The Watermaster is currently engaged in a comprehensive review of its management procedures with stakeholder entities; and the SEIR should address this process and assure compliance with any subsequent management changes that occur as a result of the Watermaster process review.

- **Groundwater Quality** – The SEIR identifies the need for additional analyses and modeling to assure that project will not result in significant adverse impacts to existing groundwater wells. In the likely event that wellhead treatment is required as a result of project implementation, the SEIR should include a mitigation measure to assign responsibility for developing and operating such treatment to Western Municipal Water District. In addition, reference should be made to the cooperative agreement between the San Bernardino Valley Municipal Water District (Valley District) and the Regional Water Quality Control Board.

- **Conflicts with Existing Facilities** – The SEIR notes that project construction will occur within existing public rights of way in the City of San Bernardino. Conflicts with existing pipelines owned by the Department are anticipated; however, engineering design is not available to establish potential conflict locations. The SEIR should include a mitigation measure to provide for relocation or modification of existing Department facilities and for coordination of project design with the Department where conflicts are identified.

- **Raw Water versus Potable Water Standards** – The Department maintains several interties with the Valley District's 78" Baseline Feeder South Pipeline. This inter-agency connection provides potable water from the Department to Valley District and is subject to permit requirements for potable water supply issued to the Department by the State of California Department of Public Health (DPH). The SEIR for the project does not address treatment requirements for raw water that may enter Department's system through the Baseline Feeder interties as a result of the construction of additional groundwater wells. Removal of the existing interties may be required to separate the domestic and raw water systems, or another method established to assure compliance with the Department's DPH permit standards.

If you have any questions, please do not hesitate to give me a call at (909) 384-5107.

Sincerely yours,

Matthew H. Litchfield, P.E.
Director, Water Utility

MHL:swd

cc: Stacey Aldstadt
Robin Ohama
Greg Gage
Mark Eisen

City of Fontana
CALIFORNIA

February 15, 2011

Western Municipal Water District
Attn: Fakhri Manghi
14205 Meridian Parkway
Riverside, CA 92518

Re: Notice of Completion & Availability of a Draft Supplemental Environmental Impact Report and Draft Environmental Impact Statement (SEIR/EIS) for the Riverside-Corona Feeder ("RCF") Realignment (SCH No. 2003031121)

Dear Mr. Manghi,

On January 19, 2011, the City of Fontana Planning Division received the Notice of Completion & Availability of a Draft Supplemental Environmental Impact Report and Draft Environmental Impact Statement (SEIR/EIS) for the Riverside-Corona Feeder Realignment project. The project consists of building approximately 30 miles of a large-capacity water pipeline ranging in diameter up to 78 inches, up to 20 new and existing wells, and appurtenant facilities associated with aquifer storage and recovery. The project location extends from the City of San Bernardino, San Bernardino County on the northeast, to the City of Corona, Riverside County on the southwest. The public review period began on January 20, 2011, through March 8, 2011. At this time, the City has no comments or concerns. Thank you for allowing the City of Fontana to participate in the public review process.

Sincerely,
COMMUNITY DEVELOPMENT DEPARTMENT
PLANNING DIVISION

Stephanie Hall, Senior Planner

SH: am

STATE OF CALIFORNIA

GOVERNOR'S OFFICE *of* PLANNING AND RESEARCH

STATE CLEARINGHOUSE AND PLANNING UNIT

JERRY BROWN
GOVERNOR

RECEIVED
MAR 10 2011
Water Resources

March 8, 2011

Jack Safely
Western Municipal Water District
14205 Meridian Parkway
Riverside, CA 92518

Subject: Riverside Corona Feeder Realignment
SCH#: 2003031121

Dear Jack Safely:

The State Clearinghouse submitted the above named Joint Document to selected state agencies for review. On the enclosed Document Details Report please note that the Clearinghouse has listed the state agencies that reviewed your document. The review period closed on March 7, 2011, and the comments from the responding agency (ies) is (are) enclosed. If this comment package is not in order, please notify the State Clearinghouse immediately. Please refer to the project's ten-digit State Clearinghouse number in future correspondence so that we may respond promptly.

Please note that Section 21104(c) of the California Public Resources Code states that:

> "A responsible or other public agency shall only make substantive comments regarding those activities involved in a project which are within an area of expertise of the agency or which are required to be carried out or approved by the agency. Those comments shall be supported by specific documentation."

These comments are forwarded for use in preparing your final environmental document. Should you need more information or clarification of the enclosed comments, we recommend that you contact the commenting agency directly.

This letter acknowledges that you have complied with the State Clearinghouse review requirements for draft environmental documents, pursuant to the California Environmental Quality Act. Please contact the State Clearinghouse at (916) 445-0613 if you have any questions regarding the environmental review process.

Sincerely,

Scott Morgan
Director, State Clearinghouse

Enclosures
cc: Resources Agency

1400 10th Street P.O. Box 3044 Sacramento, California 95812-3044
(916) 445-0613 FAX (916) 323-3018 www.opr.ca.gov

Document Details Report
State Clearinghouse Data Base

SCH# 2003031121
Project Title Riverside Corona Feeder Realignment
Lead Agency Western Municipal Water District

Type JD Joint Document

Description The project is proposed to store excess imported water when it is available to increase firm water supplies, to improve water quality, and to reduce water costs. The project proposes to manage the groundwater levels through the construction of groundwater wells in the San Bernardino Basin Area and pumps to deliver the groundwater supply to water users. The project will also include a new water pipeline to serve portions of San Bernardino and Riverside counties. This system of storage, extraction and distribution will improve the reliability of WMWD's water supply through the managed storage and distribution of excess imported water and reduce possible water shortages during dry years through reduced dependence on imported water during dry year conditions. The achieve this purpose, the FCF project replenishes excess State Water Project (SWP) water supplied by Metropolitan Water District of Southern California (MWD) into the San Bernardino Groundwater Basin Area, and extracts and moves water throughout the region by way of interconnections between local groundwater basins.

Lead Agency Contact

Name Jack Safely
Agency Western Municipal Water District
Phone 951 571 7100 **Fax**
email water@wmwd.com
Address 14205 Meridian Parkway
City Riverside **State** CA **Zip** 92518

Project Location

County Riverside, San Bernardino
City Colton, Corona, Grand Terrace, Highland, Riverside, ...
Region
Lat / Long 34° 04' 47" N / 117° 17' 18" W
Cross Streets Various
Parcel No. Multiple
Township 2S **Range** 6W **Section** **Base** SBB&M

Proximity to:

Highways I-15, I-10, SR-60, SR-91
Airports Riverside, Flabob
Railways BNSF, Southern Pacific
Waterways Santa Ana River, Gage Canal
Schools
Land Use Various land uses, primarily road right-of-ways / Various / Various

---

Project Issues Archaeologic-Historic; Biological Resources; Noise; Toxic/Hazardous; Vegetation; Water Quality; Wetland/Riparian; Wildlife; Growth Inducing; Landuse; Cumulative Effects; Aesthetic/Visual; Flood Plain/Flooding; Air Quality; Traffic/Circulation; Water Supply

---

Reviewing Agencies Resources Agency; Department of Conservation; Department of Fish and Game, Region 6; Cal Fire; Office of Historic Preservation; Department of Parks and Recreation; Department of Water Resources; California Highway Patrol; Caltrans, District 8; Department of Housing and Community Development; Air Resources Board, Major Industrial Projects; Regional Water Quality Control Board, Region 8; Department of Toxic Substances Control; California Energy Commission; Native American Heritage Commission; Public Utilities Commission

Note: Blanks in data fields result from insufficient information provided by lead agency.

Document Details Report
State Clearinghouse Data Base

Date Received 01/20/2011 ***Start of Review*** 01/20/2011 ***End of Review*** 03/07/2011

Note: Blanks in data fields result from insufficient information provided by lead agency.

-----Original Message-----
From: Debbie_Allen@nps.gov [mailto:Debbie_Allen@nps.gov]
Sent: Thursday, March 17, 2011 5:11 PM
To: Witherall, Amy J
Cc: Schmierer, Alan C.; WASO_EQD_ExtRev; oepcsfn@aol.com; Port, Patricia
Subject: Re: DES-11/0001:Riverside-Corona Feeder Project, Riverside

Subject document has no comment from PWR.

Debbie Allen
National Park Service
Partnerships Programs, PWR
1111 Jackson Street #700
Oakland, CA 94607
510/817-1446
510/817-1505 Fax

"Don't dwell on what went wrong. Instead, focus on what to do next.
Spend
your energies on moving forward toward finding the answer." -- Denis Waitley

Dale_Morlock@nps.gov

To 01/26/2011 10:56 AM Debbie_Allen@nps.gov
cc

Subject DES-11/0001:Riverside-Corona Feeder Project, Riverside

NPS External Affairs Program: ER2000 Program Email Instruction Sheet
United States Department of the Interior
National Park Service Environmental Quality Division
7333 W. Jefferson Avenue
Lakewood, CO 80235-2017

EIS/Related Document Review: Detail View
http://er2000/detail.cfm?ernum=15113

Document Information

Record #15113
ER Document Number DES-11/0001
Document Title Riverside-Corona Feeder Project, Riverside
Location

State	County
California	Riverside County
California	San Bernardino County

Document Type
Draft Environmental Impact Statement and Report

Doc. Classification
Water Project

Applicant
Bureau of Reclamation

Web Review Address

http://edocket.access.gpo.gov/2011/2011-1127.htm

http://www.usbr.gov/lc/socal/envdocs.html

http://www.wmwd.com/projects.htm

http://www.usbr.gov/newsroom/newsrelease/detail.cfm?RecordID=31762

http://edocket.access.gpo.gov/2010/2010-3644.htm

Document Reviewers

WASO Lead Reviewer
()
WASO Reviewers
Pat Gillespie(2225), Kerry Moss(2360), Fred Sturniolo(2420), David Vana-Miller(2380), Carl Wang(2420), Steven Elkinton(2220), Bill Commins(2200), Dave

Kreger(2033), Dale Morlock(2310), Wayne Strum(2225), Tokey Boswell(2510), Bill Hansen(2380), Sharon Kliwinski(2380), Charlie Stockman(2510), Nancy Brian(2340), Joe Carriero(2310)

Regional Lead Reviewer Alan Schmierer (PWR-O)

Regional Reviewers

Alan Schmierer(PWR-O), Debbie Allen(PWR-O), Michael Elliott(IMDE), Elaine_Jackson-Retondo(PWR-O), Lee Kreutzer(PWR-O), Sharon Powell(PWR-O), Mark Rudo(PWR-O), Michael Taylor(PWR-O)

Cultural Lead Reviewer
Daniel Odess

Cultural Reviewers
Daniel Odess

OEPC Contact
Patricia S. Port

Action
Lead Bureau
Bureau of Reclamation

Response Type
Regional Response

Instructions
Comments sent directly to Applicant. NPS Lead consolidates comments, prepares and sends comment/no comment letter directly to Applicant with copy to EQD (WASO-2310), OEPC, and (if applicable)appropriate REO. See DI Remarks Section below for specifics.

Topic Context

This is a large capacity water pipeline associated with an aquifer storage and recovery project proposed by Western Municipal Water District (WMWD) for the purpose of conveying potable water from the San Bernardino Basin Area (the Basin) to serve the needs of WMWD and other water purveyors within its service area.

It will extend across six jurisdictions, including unincorporated portions of Riverside County and the cities of San Bernardino, Colton, Grand Terrace, Riverside, and Corona.

It involves a proposed aquifer storage and recovery project, including new groundwater wells and a 28-mile water pipeline with pump stations and a reservoir storage tank.

It is to improve the reliability of Western's water supply through managed storage, extraction and distribution of local and imported water supplies, using available capacity in the Bunker Hill

Groundwater Basin and the Chino Basin.

The project will install new groundwater wells at the Bunker Hill Groundwater Basin in San Bernardino County with pipelines ranging in diameter up to 78 inches to Western's Service Area in Riverside County.

DI Remarks

Reviewers: Please Email comments to NPS Lead Alan Schmierer (PWR-O) by March 11, 2011.

NPS Lead Alan Schmierer: Please consolidate NPS comments (no comment) in memo format and send directly to BOR, Temecula, CA,
awitherall@usbr.gov by March 22, 2011) with copy to:
waso_eqd_extrev@nps.gov, and oepcsfn@aol.com

Applicant Address for Alan Schmierer: Amy Witherall, Southern California Area Office-7300, Bureau of Reclamation, 27708 Jefferson Avenue, Suite 202, Temecula, CA 92590.
BOR CONTACT: Amy Witherall.

* Telephone (951) 695-5310.
* FAX: (951) 695-5319.
* email: awitherall@usbr.gov

Email Comment Address awitherall@usbr.gov

Workflow
Send Comments to Lead Office: PWR-O
Send to: Alan Schmierer (PWR-O) by 03/11/11

Lead DOI Bureau: Bureau of Reclamation
DUE TO: Lead Bureau by 03/22/11
DATE DUE OUT: 03/22/11

OEPC Memo to EQD: 01/18/11
Comments Due To Lead WASO Div:
Comments Due Out to
OEPC/Wash or Applicant: 03/22/11
Comments Due To Lead Region: 03/11/11
Comments Due in EQD:
Comments Due to REO:

Tracking Dates
Rcvd. Region Comments:
Comments Sent to OEPC:
New Instructions:
Recvd. Ext. Letter:
Reg. Cmts. to Bureau:
Cmts. Called In:
Comments Sent to EQD Chief:

Comment Letter/Memo Signed:
Recvd. Extension:
Sent Add. Info:
Reg. Cmts. Listed:
Rcvd. Bureau Cmts:

Tracking Notes
Reviewer Notes
Documentation

Document Last Modified: 01/26/2011
Complete: False
Date Created: 01/20/2011
Date Last Email Sent:

MWD
METROPOLITAN WATER DISTRICT OF SOUTHERN CALIFORNIA

Executive Office

March 22, 2011 **Via Fax, Electronic and Regular Mail**

Mrs. Amy Witherall
SCAO-7300
Bureau of Reclamation
Southern California Area Office
27708 Jefferson Ave
Suite 202
Temecula, CA 92590

Dear Mrs. Witherall:

Notice of Availability of a
Supplemental Draft Environmental Impact Report/
Environmental Impact Statement for the Riverside-Corona Feeder Project

The Metropolitan Water District of Southern California (Metropolitan) has reviewed the Notice of Availability of a Draft Environmental Impact Report/Environmental Impact Statement for the Riverside-Corona Feeder Project (Draft EIR/EIS). Western Municipal Water District (WMWD) is acting as the Lead Agency under the California Environmental Quality Act for this project. The proposed project and alternatives for the Riverside-Corona Feeder pipelines and connections to regional facilities will extend across multiple jurisdictions, including unincorporated portions of San Bernardino and Riverside Counties and the cities of San Bernardino, Colton, Corona, Grand Terrace, Redlands, Rialto, and Riverside. The proposed infrastructure will allow WMWD to store State Water Project water purchased from Metropolitan in the existing San Bernardino Groundwater Basin, along with local Santa Ana River flows and groundwater from existing Chino Basin desalter facilities when supplies are available. The stored water would then be extracted by installing up to 20 groundwater wells and conveyed through a new 28-mile long pipeline ranging up to 78 inches in diameter and through new connections to existing pipelines for delivery to communities in WMWD's service area. This letter contains Metropolitan's comments on the proposed project as a potentially affected public agency.

700 N. Alameda Street, Los Angeles, California 90012 • Mailing Address: P.O. Box 54153, Los Angeles, California, 90054-0153 • Telephone: (213) 217-6000

Based on Metropolitan's review of Figure 1 in the Draft EIR/EIS, it appears that the proposed pipelines conveying groundwater from the San Bernardino and Chino groundwater basins will cross Metropolitan's Upper Feeder (steel, diameter ranging in size from 123" to 133") pipeline and right of way at several locations. These crossings appear to occur within the region bounded by Magnolia Avenue to the north, El Sobrante Road to the south, Monroe Street to the east, and La Sierra Avenue to the west. Metropolitan requires that the proposed pipelines conveying untreated groundwater at these crossings incorporate the necessary secondary containment, pipe material, and/or pipe separation to ensure no adverse impacts to the water quality, structural integrity, or operations of Metropolitan's Upper Feeder.

Metropolitan must be allowed to maintain its rights-of-way and requires unobstructed access to its facilities in order to maintain and repair its system. In order to avoid potential conflicts with Metropolitan's facilities and rights-of-way, we require that any design plans for any activity in the area of Metropolitan's pipelines or facilities be submitted for our review and written approval. Approval of the project should be contingent on Metropolitan's approval of design plans for portions of the proposed project that could impact its facilities.

Detailed prints of drawings of Metropolitan's pipelines and rights-of-way may be obtained by calling Metropolitan's Substructures Information Line at (213) 217-6564. To assist the applicant in preparing plans that are compatible with Metropolitan's facilities and easements, we have enclosed a copy of the "Guidelines for Developments in the Area of Facilities, Fee Properties, and/or Easement of The Metropolitan Water District of Southern California." Please note that all submitted designs or plans must clearly identify Metropolitan's facilities and rights-of-way.

Please continue to keep Metropolitan informed of ongoing developments. We appreciate the opportunity to provide input to your planning process and we look forward to receiving future documentation on this project. For further assistance, please contact me at (213) 217-6409.

Very truly yours,

John Shamma

John Shamma
Manager, Environmental Planning Team

CY/dw

(J:\Environmental-Planning & Compliance\COMPLETED JOBS\March 2011\Job No. 2011013105 – Riverside Corona Feeder Project)

Enclosure: Planning Guidelines

Guidelines for Developments in the Area of Facilities, Fee Properties, and/or Easements of The Metropolitan Water District of Southern California

1. Introduction

a. The following general guidelines should be followed for the design of proposed facilities and developments in the area of Metropolitan's facilities, fee properties, and/or easements.

b. We require that 3 copies of your tentative and final record maps, grading, paving, street improvement, landscape, storm drain, and utility plans be submitted for our review and written approval as they pertain to Metropolitan's facilities, fee properties and/or easements, prior to the commencement of any construction work.

2. Plans, Parcel and Tract Maps

The following are Metropolitan's requirements for the identification of its facilities, fee properties, and/or easements on your plans, parcel maps and tract maps:

a. Metropolitan's fee properties and/or easements and its pipelines and other facilities must be fully shown and identified as Metropolitan's on all applicable plans.

b. Metropolitan's fee properties and/or easements must be shown and identified as Metropolitan's with the official recording data on all applicable parcel and tract maps.

c. Metropolitan's fee properties and/or easements and existing survey monuments must be dimensionally tied to the parcel or tract boundaries.

d. Metropolitan's records of surveys must be referenced on the parcel and tract maps.

3. Maintenance of Access Along Metropolitan's Rights-of-Way

a. Proposed cut or fill slopes exceeding 10 percent are normally not allowed within Metropolitan's fee properties or easements. This is required to facilitate the use of construction and maintenance equipment, and provide access to its aboveground and belowground facilities.

b. We require that 16-foot-wide commercial-type driveway approaches be constructed on both sides of all streets crossing Metropolitan's rights-of-way. Openings are required in any median island. Access ramps, if necessary, must be at least 16-feet-wide. Grades of ramps are normally not allowed to exceed 10 percent. If the slope of an access ramp must exceed 10 percent due to the topography, the ramp must be paved. We require a 40-foot-long level area on the driveway approach to access ramps where the ramp meets the street. At Metropolitan's fee properties, we may require fences and gates.

c. The terms of Metropolitan's permanent easement deeds normally preclude the building or maintenance of structures of any nature or kind within its easements, to ensure safety and avoid interference with operation and maintenance of Metropolitan's pipelines or other facilities. Metropolitan must have vehicular access along the easements at all times for inspection, patrolling, and for maintenance of the pipelines and other facilities on a routine basis. We require a 20-foot-wide clear zone around all above-ground facilities for this routine access. This clear zone should slope away from our facility on a grade not to exceed 2 percent. We must also have access along the easements with construction equipment. An example of this is shown on Figure 1.

d. The footings of any proposed buildings adjacent to Metropolitan's fee properties and/or easements must not encroach into the fee property or easement or impose additional loading on Metropolitan's pipelines or other facilities therein. A typical situation is shown on Figure 2. Prints of the detail plans of the footings for any building or structure adjacent to the fee property or easement must be submitted for our review and written approval as they pertain to the pipeline or other facilities therein. Also, roof eaves of buildings adjacent to the easement or fee property must not overhang into the fee property or easement area.

e. Metropolitan's pipelines and other facilities, e.g. structures, manholes, equipment, survey monuments, etc. within its fee properties and/or easements must be protected from damage by the easement holder on Metropolitan's property or the property owner where Metropolitan has an easement, at no expense to Metropolitan. If the facility is a cathodic protection station it shall be located prior to any grading or excavation. The exact location, description and way of protection shall be shown on the related plans for the easement area.

4. Easements on Metropolitan's Property

a. We encourage the use of Metropolitan's fee rights-of-way by governmental agencies for public street and utility purposes, provided that such use does not interfere with Metropolitan's use of the property, the entire width of the property is accepted into the agency's public street system and fair market value is paid for such use of the right-of-way.

b. Please contact the Director of Metropolitan's Right of Way and Land Division, telephone (213) 250-6302, concerning easements for landscaping, street, storm drain, sewer, water or other public facilities proposed within Metropolitan's fee properties. A map and legal description of the requested easements must be submitted. Also, written evidence must be submitted that shows the city or county will accept the easement for the specific purposes into its public system. The grant of the easement will be subject to Metropolitan's rights to use its land for water pipelines and related purposes to the same extent as if such grant had not been made. There will be a charge for the easement. Please note that, if entry is required on the property prior to issuance of the easement, an entry permit must be obtained. There will also be a charge for the entry permit.

5. Landscaping

Metropolitan's landscape guidelines for its fee properties and/or easements are as follows:

a. A green belt may be allowed within Metropolitan's fee property or easement.

b. All landscape plans shall show the location and size of Metropolitan's fee property and/or easement and the location and size of Metropolitan's pipeline or other facilities therein.

c. Absolutely no trees will be allowed within 15 feet of the centerline of Metropolitan's existing or future pipelines and facilities.

d. Deep-rooted trees are prohibited within Metropolitan's fee properties and/or easements. Shallow-rooted trees are the only trees allowed. The shallow-rooted trees will not be permitted any closer than 15 feet from the centerline of the pipeline, and such trees shall not be taller than 25 feet with a root spread no greater than 20 feet in diameter at maturity. Shrubs, bushes, vines, and ground cover are permitted, but larger shrubs and bushes should not be planted directly over our pipeline. Turf is acceptable. We require submittal of landscape plans for Metropolitan's prior review and written approval. (See Figure 3).

e. The landscape plans must contain provisions for Metropolitan's vehicular access at all times along its rights-of-way to its pipelines or facilities therein. Gates capable of accepting Metropolitan's locks are required in any fences across its rights-of-way. Also, any walks or drainage facilities across its access route must be constructed to AASHTO H-20 loading standards.

f. Rights to landscape any of Metropolitan's fee properties must be acquired from its Right of Way and Land Division. Appropriate entry permits must be obtained prior to any entry on its property. There will be a charge for any entry permit or easements required.

6. <u>Fencing</u>

Metropolitan requires that perimeter fencing of its fee properties and facilities be constructed of universal chain link, 6 feet in height and topped with 3 strands of barbed wire angled upward and outward at a 45 degree angle or an approved equal for a total fence height of 7 feet. Suitable substitute fencing may be considered by Metropolitan. (Please see Figure 5 for details).

7. <u>Utilities in Metropolitan's Fee Properties and/or Easements or Adjacent to Its Pipeline in Public Streets</u>

Metropolitan's policy for the alinement of utilities permitted within its fee properties and/or easements and street rights-of-way is as follows:

a. Permanent structures, including catch basins, manholes, power poles, telephone riser boxes, etc., shall not be located within its fee properties and/or easements.

b. We request that permanent utility structures within public streets, in which Metropolitan's facilities are constructed under the Metropolitan Water District Act, be placed as far from our pipeline as possible, but not closer than 5 feet from the outside of our pipeline.

c. The installation of utilities over or under Metropolitan's pipeline(s) must be in accordance with the requirements shown on the enclosed prints of Drawings Nos. C-11632 and C-9547. Whenever possible we request a minimum of one foot clearance between Metropolitan's pipe and your facility. Temporary support of Metropolitan's pipe may also be required at undercrossings of its pipe in an open trench. The temporary support plans must be reviewed and approved by Metropolitan.

d. Lateral utility crossings of Metropolitan's pipelines must be as perpendicular to its pipeline alinement as practical. Prior to any excavation our pipeline shall be located manually and any excavation within two feet of our pipeline must be done by hand. This shall be noted on the appropriate drawings.

e. Utilities constructed longitudinally within Metropolitan's rights-of-way must be located outside the theoretical trench prism for uncovering its pipeline and must be located parallel to and as close to its rights-of-way lines as practical.

f. When piping is jacked or installed in jacked casing or tunnel under Metropolitan's pipe, there must be at least two feet of vertical clearance between the bottom of Metropolitan's pipe and the top of the jacked pipe, jacked casing or tunnel. We also require that detail drawings of the shoring for the jacking or tunneling pits be submitted for our review and approval. Provisions must be made to grout any voids around the exterior of the jacked pipe, jacked casing or tunnel. If the piping is installed in a jacked casing or tunnel the annular space between the piping and the jacked casing or tunnel must be filled with grout.

g. Overhead electrical and telephone line requirements:

1) Conductor clearances are to conform to the California State Public Utilities Commission, General Order 95, for Overhead Electrical Line Construction or at a greater clearance if required by Metropolitan. Under no circumstances shall clearance be less than 35 feet.

2) A marker must be attached to the power pole showing the ground clearance and line voltage, to help prevent damage to your facilities during maintenance or other work being done in the area.

3) Line clearance over Metropolitan's fee properties and/or easements shall be shown on the drawing to indicate the lowest point of the line under the most adverse conditions including consideration of sag, wind load, temperature change, and support type. We require that overhead lines be located at least 30 feet laterally away from all above-ground structures on the pipelines.

4) When underground electrical conduits, 120 volts or greater, are installed within Metropolitan's fee property and/or easement, the conduits must be incased in a minimum of three inches of red concrete. Where possible, above ground warning signs must also be placed at the right-of-way lines where the conduits enter and exit the right-of-way.

h. The construction of sewerlines in Metropolitan's fee properties and/or easements must conform to the California Department of Health Services Criteria for the Separation of Water Mains and Sanitary Services and the local City or County Health Code Ordinance as it relates to installation of sewers in the vicinity of pressure waterlines. The construction of sewerlines should also conform to these standards in street rights-of- way.

i. Cross sections shall be provided for all pipeline crossings showing Metropolitan's fee property and/or easement limits and the location of our pipeline(s). The exact locations of the crossing pipelines and their elevations shall be marked on as-built drawings for our information.

j. Potholing of Metropolitan's pipeline is required if the vertical clearance between a utility and Metropolitan's pipeline is indicated on the plan to be one foot or less. If the indicated clearance is between one and two feet, potholing is suggested. Metropolitan will provide a representative to assists others in locating and identifying its pipeline. Two-working days notice is requested.

k. Adequate shoring and bracing is required for the full depth of the trench when the excavation encroaches within the zone shown on Figure 4.

l. The location of utilities within Metropolitan's fee property and/or easement shall be plainly marked to help prevent damage during maintenance or other work done in the area. Detectable tape over buried utilities should be placed a minimum of 12 inches above the utility and shall conform to the following requirements:

1) Water pipeline: A two-inch blue warning tape shall be imprinted with:

"CAUTION BURIED WATER PIPELINE"

2) Gas, oil, or chemical pipeline: A two-inch yellow warning tape shall be imprinted with:

"CAUTION BURIED _____ PIPELINE"

3) Sewer or storm drain pipeline: A two-inch green warning tape shall be imprinted with:

"CAUTION BURIED _____ PIPELINE"

4) Electric, street lighting, or traffic signals conduit: A two-inch red warning tape shall be imprinted with:

"CAUTION BURIED _____ CONDUIT"

5) Telephone, or television conduit: A two-inch orange warning tape shall be imprinted with:

"CAUTION BURIED _____ CONDUIT"

m. Cathodic Protection requirements:

1) If there is a cathodic protection station for Metropolitan's pipeline in the area of the proposed work, it shall be located prior to any grading or excavation. The exact location, description and manner of protection shall be shown on all applicable plans. Please contact Metropolitan's Corrosion Engineering Section, located at Metropolitan's F. E. Weymouth Softening and Filtration Plant, 700 North Moreno Avenue, La Verne, California 91750, telephone (714) 593-7474, for the locations of Metropolitan's cathodic protection stations.

2) If an induced-current cathodic protection system is to be installed on any pipeline crossing Metropolitan's pipeline, please contact Mr. Wayne E. Risner at (714) 593-7474 or (213) 250-5085. He will review the proposed system and determine if any conflicts will arise with the existing cathodic protection systems installed by Metropolitan.

3) Within Metropolitan's rights-of-way, pipelines and carrier pipes (casings) shall be coated with an approved protective coating to conform to Metropolitan's requirements, and shall be maintained in a neat and orderly condition as directed by Metropolitan. The application and monitoring of cathodic protection on the pipeline and casing shall conform to Title 49 of the Code of Federal Regulations, Part 195.

4) If a steel carrier pipe (casing) is used:

(a) Cathodic protection shall be provided by use of a sacrificial magnesium anode (a sketch showing the cathodic protection details can be provided for the designers information).

(b) The steel carrier pipe shall be protected with a coal tar enamel coating inside and out in accordance with AWWA C203 specification.

n. All trenches shall be excavated to comply with the CAL/OSHA Construction Safety Orders, Article 6, beginning with Sections 1539 through 1547. Trench backfill shall be placed in 8-inch lifts and shall be compacted to 95 percent relative compaction (ASTM D698) across roadways and through protective dikes. Trench backfill elsewhere will be compacted to 90 percent relative compaction (ASTM D698).

o. Control cables connected with the operation of Metropolitan's system are buried within streets, its fee properties and/or easements. The locations and elevations of these cables shall be shown on the drawings. The drawings shall note that prior to any excavation in the area, the control cables shall be located and measures shall be taken by the contractor to protect the cables in place.

p. Metropolitan is a member of Underground Service Alert (USA). The contractor (excavator) shall contact USA at 1-800-422-4133 (Southern California) at least 48 hours prior to starting any excavation work. The contractor will be liable for any damage to Metropolitan's facilities as a result of the construction.

8. Paramount Right

Facilities constructed within Metropolitan's fee properties and/or easements shall be subject to the paramount right of Metropolitan to use its fee properties and/or easements for the purpose for which they were acquired. If at any time Metropolitan or its assigns should, in the exercise of their rights, find it necessary to remove any of the facilities from the fee properties and/or easements, such removal and replacement shall be at the expense of the owner of the facility.

9. Modification of Metropolitan's Facilities

When a manhole or other of Metropolitan's facilities must be modified to accommodate your construction or reconstruction, Metropolitan will modify the facilities with its forces. This should be noted on the construction plans. The estimated cost to perform this modification will be given to you and we will require a deposit for this amount before the work is performed. Once the deposit is received, we will schedule the work. Our forces will coordinate the work with your contractor. Our final billing will be based on actual cost incurred, and will include materials, construction, engineering plan review, inspection, and administrative overhead charges calculated in accordance with Metropolitan's standard accounting practices. If the cost is less than the deposit, a refund will be made; however, if the cost exceeds the deposit, an invoice will be forwarded for payment of the additional amount.

10. Drainage

a. Residential or commercial development typically increases and concentrates the peak storm water runoff as well as the total yearly storm runoff from an area, thereby increasing the requirements for storm drain facilities downstream of the development. Also, throughout the year water from landscape irrigation, car washing, and other outdoor domestic water uses flows into the storm drainage system resulting in weed abatement, insect infestation, obstructed access and other problems. Therefore, it is Metropolitan's usual practice not to approve plans that show discharge of drainage from developments onto its fee properties and/or easements.

b. If water must be carried across or discharged onto Metropolitan's fee properties and/or easements, Metropolitan will insist that plans for development provide that it be carried by closed conduit or lined open channel approved in writing by Metropolitan. Also the drainage facilities must be maintained by others, e.g., city, county, homeowners association, etc. If the development proposes changes to existing drainage features, then the developer shall make provisions to provide for replacement and these changes must be approved by Metropolitan in writing.

11. Construction Coordination

During construction, Metropolitan's field representative will make periodic inspections. We request that a stipulation be added to the plans or specifications for notification of Mr. _____ of Metropolitan's Operations Services Branch, telephone (213) 250-____, at least two working days prior to any work in the vicinity of our facilities.

12. Pipeline Loading Restrictions

a. Metropolitan's pipelines and conduits vary in structural strength, and some are not adequate for AASHTO H-20 loading. Therefore, specific loads over the specific sections of pipe or conduit must be reviewed and approved by Metropolitan. However, Metropolitan's pipelines are typically adequate for AASHTO H-20 loading provided that the cover over the pipeline is not less than four feet or the cover is not substantially increased. If the temporary cover over the pipeline during construction is between three and four feet, equipment must restricted to that which

imposes loads no greater than AASHTO H-10. If the cover is between two and three feet, equipment must be restricted to that of a Caterpillar D-4 tract-type tractor. If the cover is less than two feet, only hand equipment may be used. Also, if the contractor plans to use any equipment over Metropolitan's pipeline which will impose loads greater than AASHTO H-20, it will be necessary to submit the specifications of such equipment for our review and approval at least one week prior to its use. More restrictive requirements may apply to the loading guideline over the San Diego Pipelines 1 and 2, portions of the Orange County Feeder, and the Colorado River Aqueduct. Please contact us for loading restrictions on all of Metropolitan's pipelines and conduits.

b. The existing cover over the pipeline shall be maintained unless Metropolitan determines that proposed changes do not pose a hazard to the integrity of the pipeline or an impediment to its maintenance.

13. Blasting

a. At least 20 days prior to the start of any drilling for rock excavation blasting, or any blasting, in the vicinity of Metropolitan's facilities, a two-part preliminary conceptual plan shall be submitted to Metropolitan as follows:

b. Part 1 of the conceptual plan shall include a complete summary of proposed transportation, handling, storage, and use of explosions.

c. Part 2 shall include the proposed general concept for blasting, including controlled blasting techniques and controls of noise, fly rock, airblast, and ground vibration.

14. CEQA Requirements

a. When Environmental Documents Have Not Been Prepared

1) Regulations implementing the California Environmental Quality Act (CEQA) require that Metropolitan have an opportunity to consult with the agency or consultants preparing any environmental documentation. We are required to review and consider the environmental effects of the project as shown in the Negative Declaration or Environmental Impact Report (EIR) prepared for your project before committing Metropolitan to approve your request.

2) In order to ensure compliance with the regulations implementing CEQA where Metropolitan is not the Lead Agency, the following minimum procedures to ensure compliance with the Act have been established:

a) Metropolitan shall be timely advised of any determination that a Categorical Exemption applies to the project. The Lead Agency is to advise Metropolitan that it and other agencies participating in the project have complied with the requirements of CEQA prior to Metropolitan's participation.

b) Metropolitan is to be consulted during the preparation of the Negative Declaration or EIR.

c) Metropolitan is to review and submit any necessary comments on the Negative Declaration or draft EIR.

d) Metropolitan is to be indemnified for any costs or liability arising out of any violation of any laws or regulations including but not limited to the California Environmental Quality Act and its implementing regulations.

b. <u>When Environmental Documents Have Been Prepared</u>

If environmental documents have been prepared for your project, please furnish us a copy for our review and files in a timely manner so that we may have sufficient time to review and comment. The following steps must also be accomplished:

1) The Lead Agency is to advise Metropolitan that it and other agencies participating in the project have complied with the requirements of CEQA prior to Metropolitan's participation.

2) You must agree to indemnify Metropolitan, its officers, engineers, and agents for any costs or liability arising out of any violation of any laws or regulations including but not limited to the California Environmental Quality Act and its implementing regulations.

15. <u>Metropolitan's Plan-Review Cost</u>

a. An engineering review of your proposed facilities and developments and the preparation of a letter response

giving Metropolitan's comments, requirements and/or approval that will require 8 man-hours or less of effort is typically performed at no cost to the developer, unless a facility must be modified where Metropolitan has superior rights. If an engineering review and letter response requires more than 8 man-hours of effort by Metropolitan to determine if the proposed facility or development is compatible with its facilities, or if modifications to Metropolitan's manhole(s) or other facilities will be required, then all of Metropolitan's costs associated with the project must be paid by the developer, unless the developer has superior rights.

b. A deposit of funds will be required from the developer before Metropolitan can begin its detailed engineering plan review that will exceed 8 hours. The amount of the required deposit will be determined after a cursory review of the plans for the proposed development.

c. Metropolitan's final billing will be based on actual cost incurred, and will include engineering plan review, inspection, materials, construction, and administrative overhead charges calculated in accordance with Metropolitan's standard accounting practices. If the cost is less than the deposit, a refund will be made; however, if the cost exceeds the deposit, an invoice will be forwarded for payment of the additional amount. Additional deposits may be required if the cost of Metropolitan's review exceeds the amount of the initial deposit.

16. <u>Caution</u>

We advise you that Metropolitan's plan reviews and responses are based upon information available to Metropolitan which was prepared by or on behalf of Metropolitan for general record purposes only. Such information may not be sufficiently detailed or accurate for your purposes. No warranty of any kind, either express or implied, is attached to the information therein conveyed as to its accuracy, and no inference should be drawn from Metropolitan's failure to comment on any aspect of your project. You are therefore cautioned to make such surveys and other field investigations as you may deem prudent to assure yourself that any plans for your project are correct.

17. Additional Information

Should you require additional information, please contact:

Civil Engineering Substructures Section
Metropolitan Water District
of Southern California
P.O. Box 54153
Los Angeles, California 90054-0153
(213) 217-6000

JEH/MRW/lk

Rev. January 22, 1989

Encl.

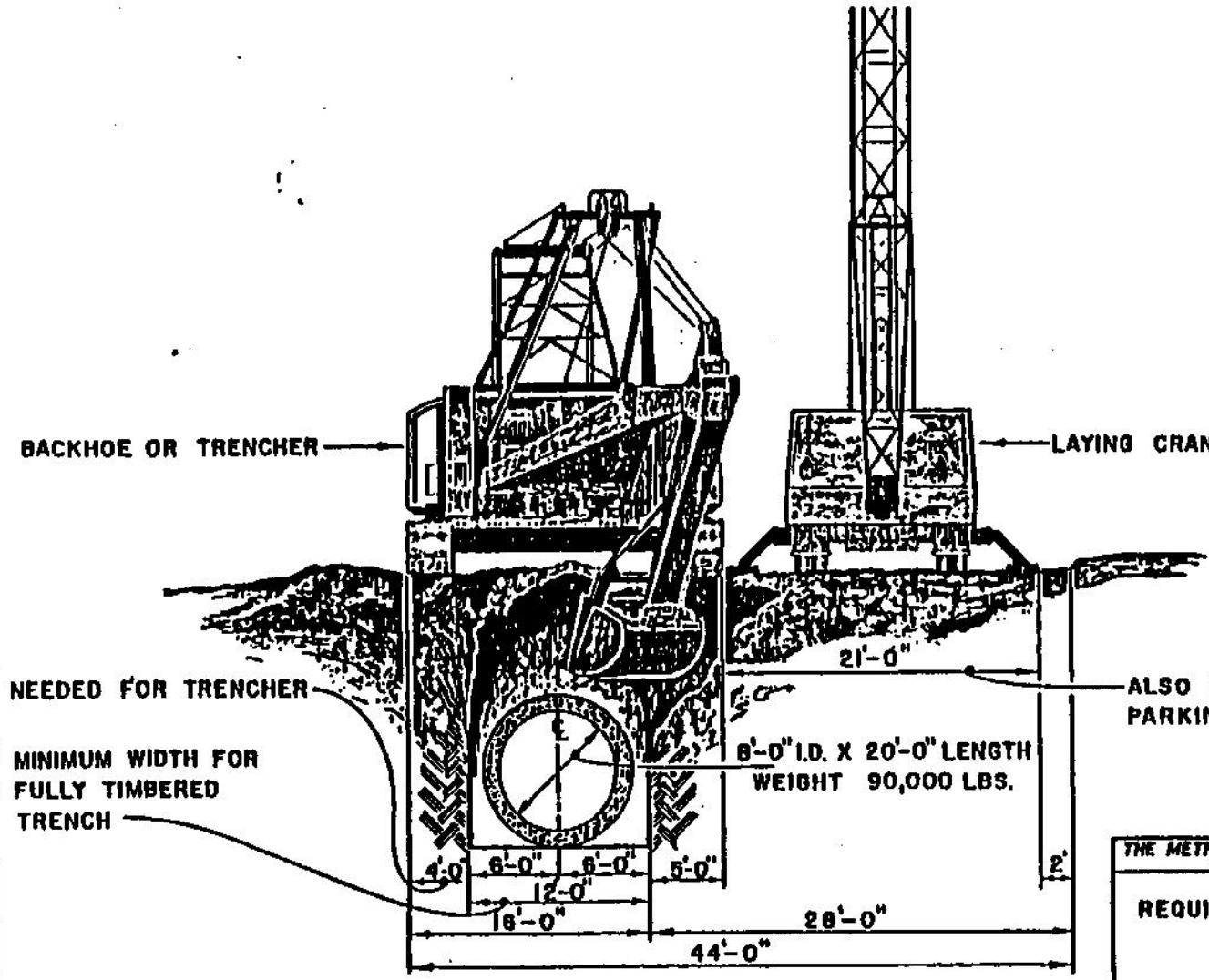

THE METROPOLITAN WATER DISTRICT OF SOUTHERN CALIFORNIA

REQUIRED CONSTRUCTION WIDTHS

DRAWN..... RECOMMENDED.....
TRACED..... APPROVED.....
CHECKED.....

FIGURE 1

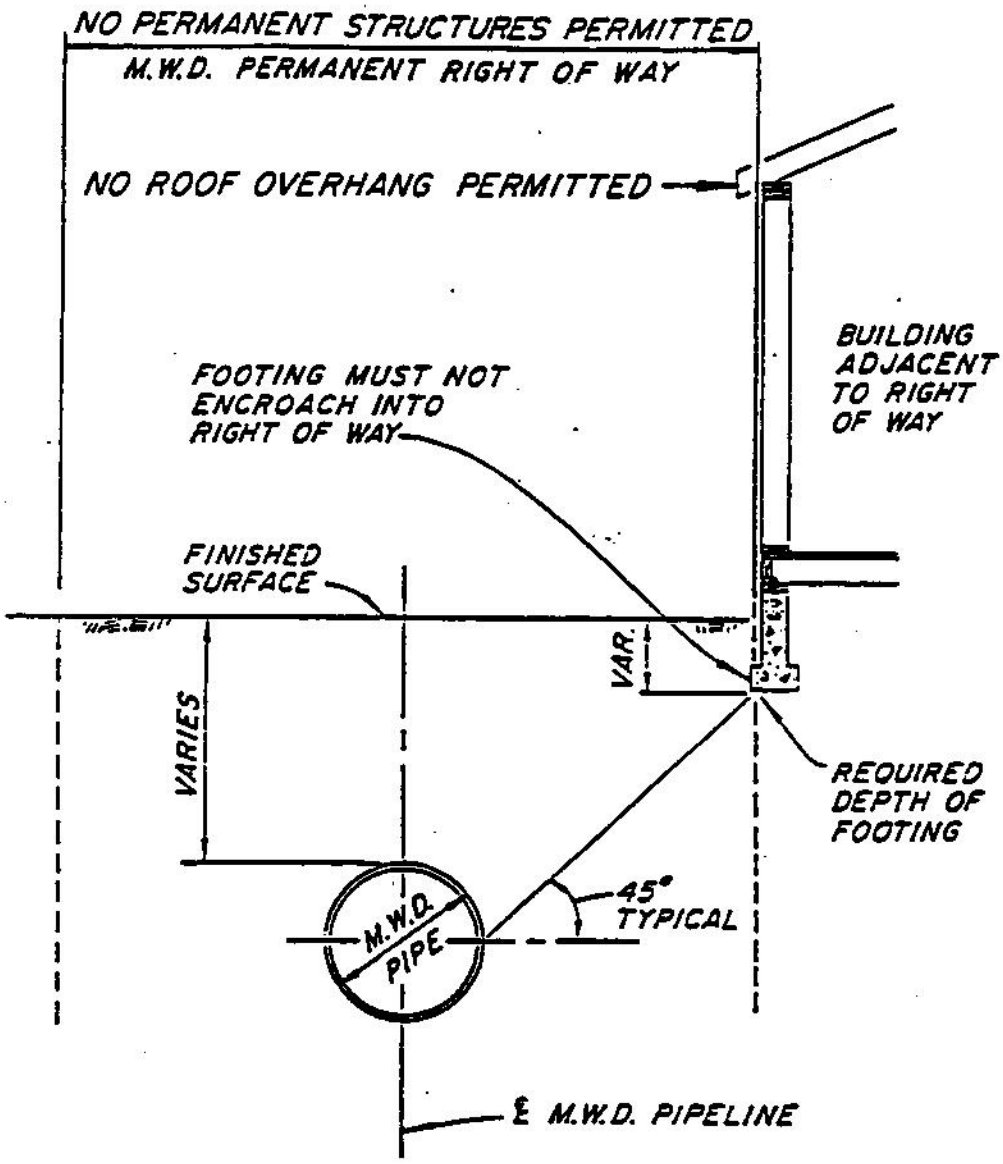

NOTE: M.W.D. PIPELINE SIZE, DEPTH, LOCATION AND WIDTH OF PERMANENT RIGHT OF WAY VARIES.

THE METROPOLITAN WATER DISTRICT OF SOUTHERN CALIFORNIA

REQUIREMENTS FOR BUILDINGS AND FOOTINGS ADJACENT TO M.W.D. RIGHT OF WAY

DRAWN ____ RECOMMENDED ____
TRACED ____
CHECKED ____ APPROVED ____

FIGURE 2

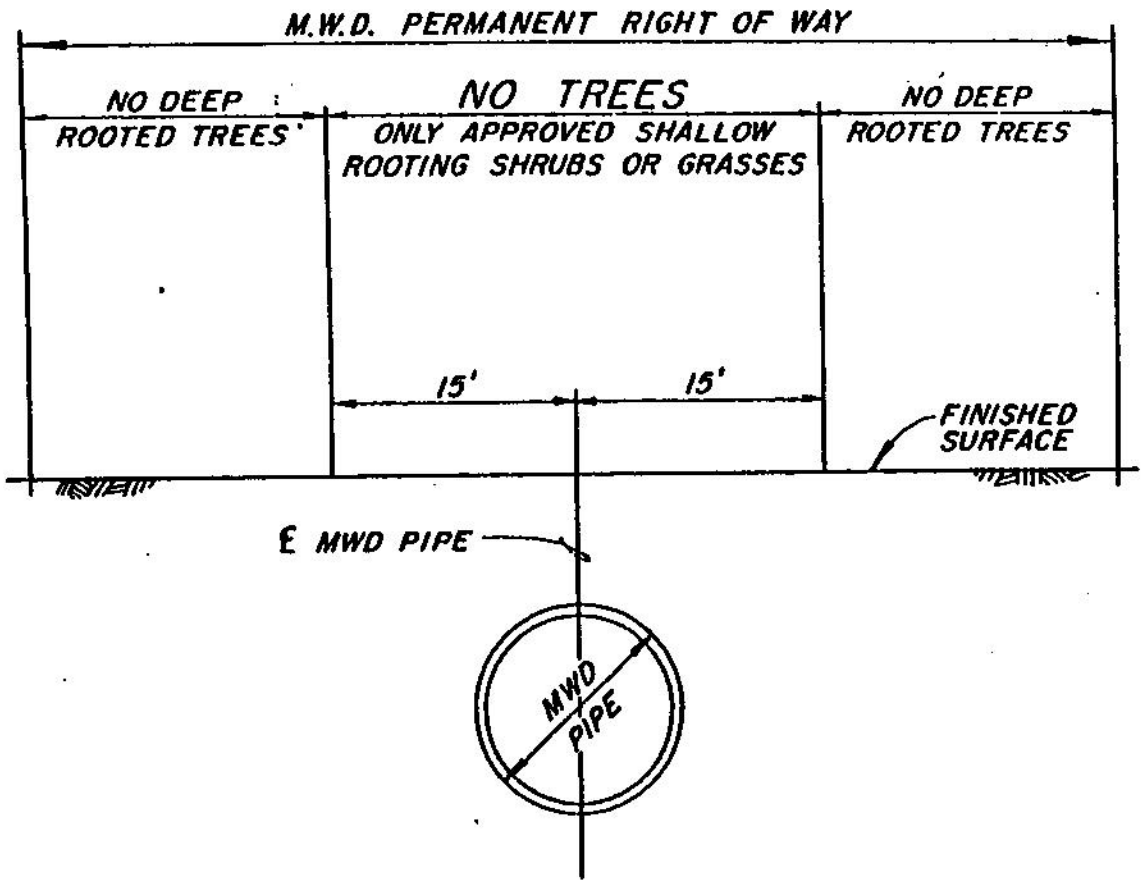

THE METROPOLITAN WATER DISTRICT OF SOUTHERN CALIFORNIA

LANDSCAPE GUIDELINES FOR M.W.D. RIGHT OF WAY

DRAWN..... RECOMMENDED.....
TRACED.....
CHECKED..... APPROVED.....

FIGURE 3

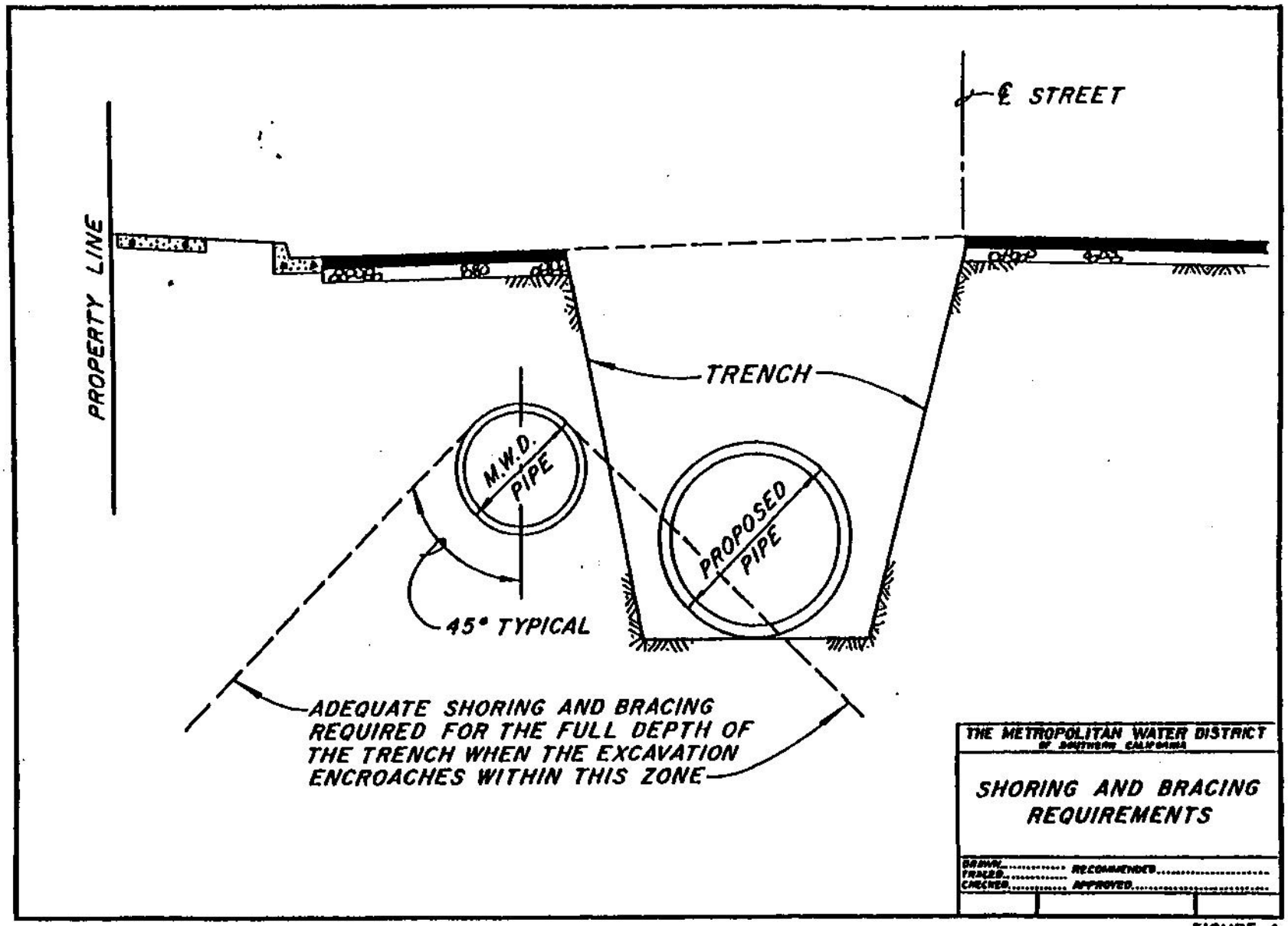
℄ STREET
PROPERTY LINE
TRENCH
M.W.D. PIPE
PROPOSED PIPE
45° TYPICAL
ADEQUATE SHORING AND BRACING REQUIRED FOR THE FULL DEPTH OF THE TRENCH WHEN THE EXCAVATION ENCROACHES WITHIN THIS ZONE
THE METROPOLITAN WATER DISTRICT OF SOUTHERN CALIFORNIA
SHORING AND BRACING REQUIREMENTS
DRAWN
TRACED
CHECKED
RECOMMENDED
APPROVED

FIGURE 4

SPECIFICATIONS NO. SHEET NO.

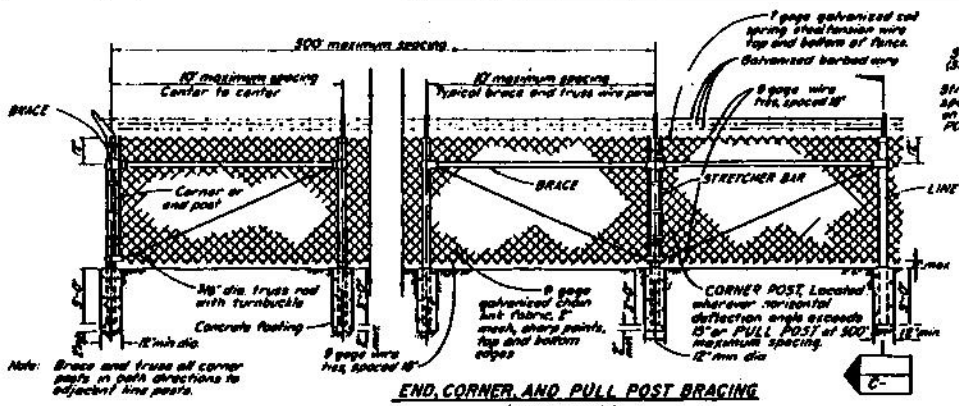

END, CORNER, AND PULL POST BRACING
(Not to scale)

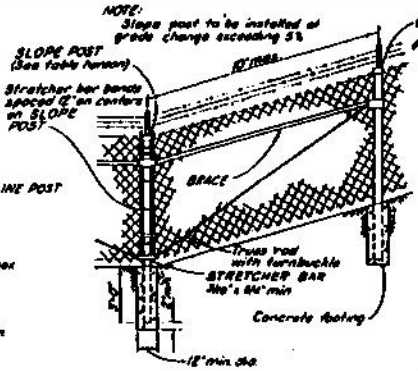

TYPICAL FENCE ON SLOPE
(Not to scale)

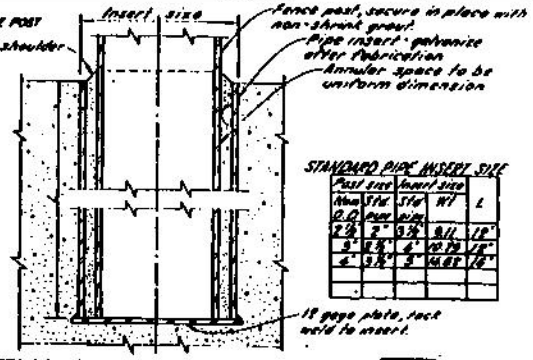

STANDARD PIPE INSERT SIZE

Post size Nominal O.D.	Insert size Pipe	Insert size Size	Wt	L
2 3/8	2"	3 1/2	5.11	12"
3"	2 1/2"	4"	10.79	12"
4"	3 1/2"	5"	14.62	12"

FENCE POST INSERT FOR CONCRETE WALL AND CONCRETE CURB
(Not to scale)

Use	Type	Nominal Size (Inches)	Actual O.D. (Inches)	Weight per foot (Pounds)
End, corner, slope, pull and gate posts (for single gates 6 feet or less in width and double gates 12 feet or less in width) for chain link fabric 72" inches or higher	Pipe	2 1/2	2.875	5.79
End, corner, slope, pull and gate posts (for single gates 6 feet or less in width and double gates 12 feet or less in width) for chain link fabric less than 72 inches height	Pipe	2	2.375	3.65
Gate posts for single swing gates over 6 feet but not over 15 feet in width and double swing gates over 12 feet but not over 36 feet in width.	Pipe	3 1/2	4.000	9.1
Gate posts for single swing gates over 15 feet but not over 18 feet in width and double swing gates over 36 feet but not over 36 feet in width.	Pipe	6	6.625	18.97
Gate posts for single swing gates over 18 feet in width and double swing gates over 36 feet in width	Pipe	8	8.625	24.70
Line posts for chain link fabric 72 inches or higher	Pipe	2	2.375	3.65
	H-Sec-tion	2 3/4 x 1 3/8		4.10
Line posts for chain link fabric less than 72 inches in height	Pipe	1 1/2	1.900	2.72
	H-Sec-tion	1 3/4 x 1 1/8		2.90
Braces	Pipe	1 1/2	1.900	2.72
	H-Sec-tion	1 3/4 x 1 1/8		2.90
Frames for gates	Pipe	1 1/2	1.900	2.72
Stiffeners for gates	Pipe	1 1/2	1.900	2.72

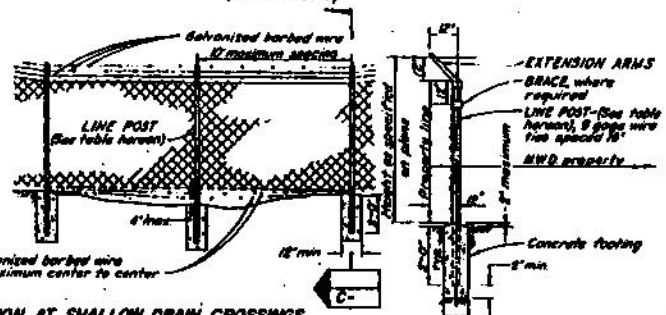

ELEVATION AT SHALLOW DRAIN CROSSINGS
(Not to scale)

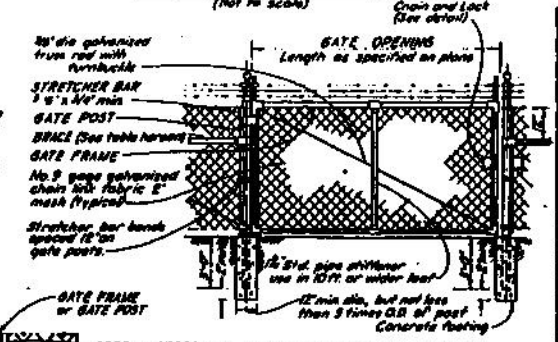

SINGLE SWING GATE DETAIL
(Not to scale)

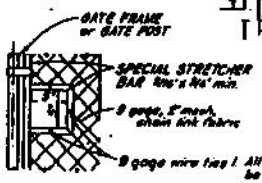

DETAIL OF CUTOUT FOR CHAIN AND LOCK
(Not to scale)

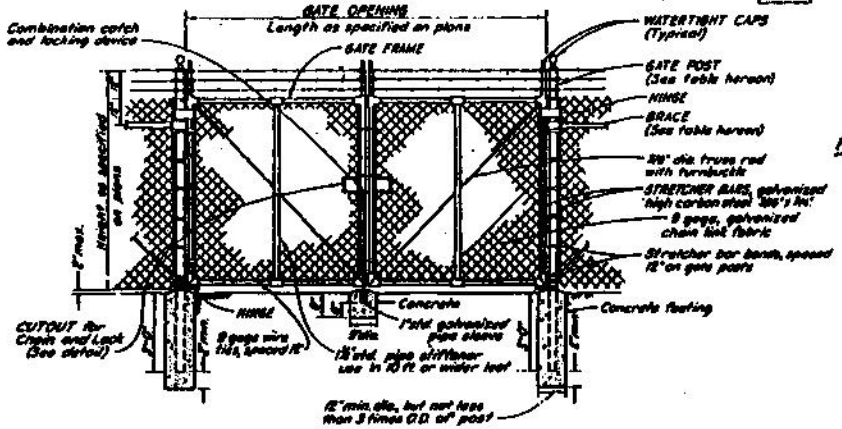

DOUBLE SWING GATE DETAIL
(Not to scale)

GENERAL NOTES

1. All ferrous parts and materials shall be galvanized after fabrication
2. Adjustable tighteners shall be turnbuckle or equivalent, having minimum 6" take-up
3. Extension arms for barbed wire shall be steel, malleable iron or wrought iron and shall be attached to the top of the post with a 1/4 inch round head rivet. The extension arms shall carry three wires each at approximately 5 inch centers in a plane approximately 45° from the vertical.
4. All gate hinges shall be heavy duty malleable iron or steel, industrial service type, 270 degree swing, or approved quality and design.
5. Secure cap to post with 1/4 inch round head rivet

NO.	DATE	DWN	CKD.	REVISION	SEC.	APP.

THE METROPOLITAN WATER DISTRICT OF SOUTHERN CALIFORNIA
DISTRIBUTION SYSTEM

CHAIN LINK FENCE DETAILS

DESIGNED
DRAWN
CHECKED
RECOMMENDED
APPROVED
LOS ANGELES

REVISIONS COORDINATION CHECK
GENERAL, MECH. STRUCT. ELEC. CIVIL SPECS. DATE
HYDROELECTRICAL COORDINATION CHECK

FIGURE 5

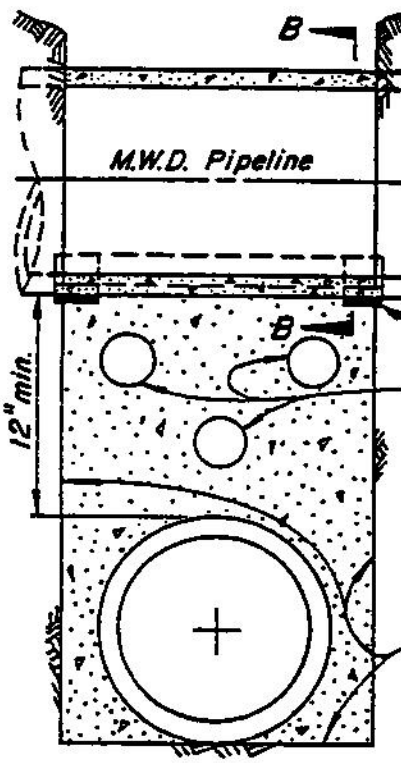

SECTION "A-A"

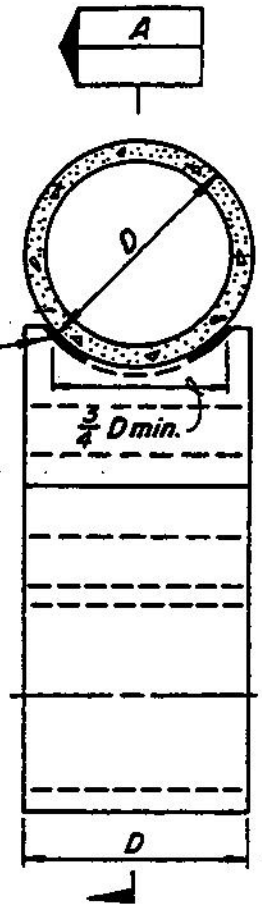

CROSS SECTION

Apertures as directed by the Engineer, total volume not to exceed 1/2 the volume of the supporting wall

Concrete support wall to be placed against undisturbed ground

1. Supporting wall shall have a firm bearing on the subgrade and against the side of the excavation.
2. Premolded expansion joint filler per ASTM D-1751-73 to be used in support for steel pipe only.
3. If trench width is 4 feet or greater, measured along centerline of M.W.D. pipe, concrete support must be constructed.
4. If trench width is less than 4 feet, clean sand backfill, compacted to 90% density in accordance with the provisions of ASTM Standard D-1557-70 may be used in lieu of the concrete support wall.

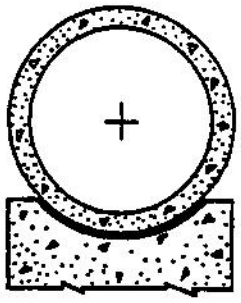

SECTION "B-B"

THE METROPOLITAN WATER DISTRICT OF SOUTHERN CALIFORNIA

TYPICAL SUPPORT FOR M.W.D. PIPELINE

DRAWN ..... RECOMMENDED .....
TRACED .....
CHECKED ..... APPROVED .....

C-9547

11-67 DIETERICH-POST CLEARPRINT 1023

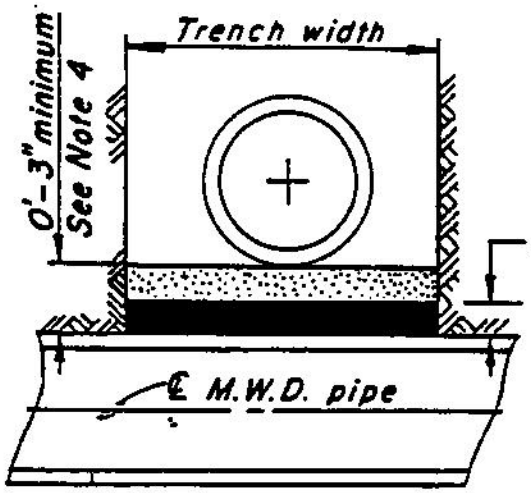

SECTION A

NOTES

1. This method to be used where the utility line is 24" or greater in diameter and the clearance between the utility line and M.W.D. pipe is 12" or less.
2. Special protection may be required if the utility line diameter is greater than M.W.D. pipe or if the cover over the utility line to the street surface is minimal and there is 12" or less clearance between M.W.D. pipe and the utility line.
3. Preformed expansion joint filler to comply with ASTM designation D-1751-73.
4. M.W.D. requests 12" minimum clearance whenever possible.

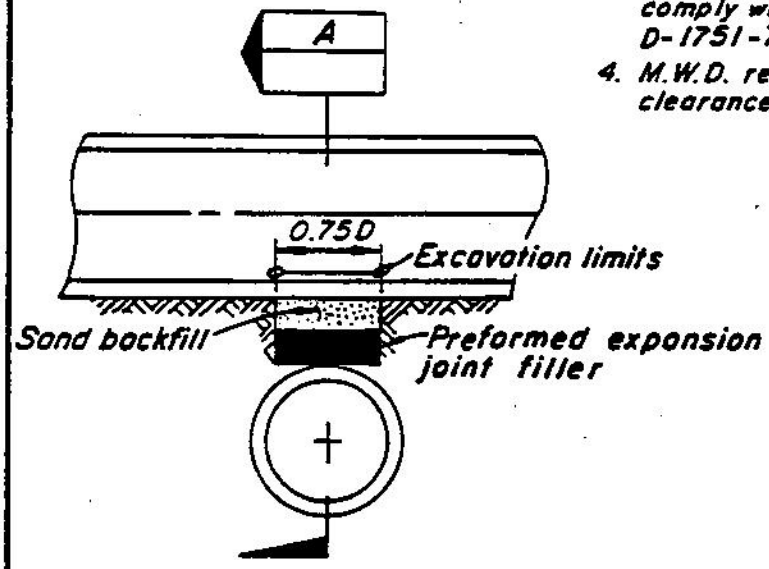

CROSS SECTION

THE METROPOLITAN WATER DISTRICT OF SOUTHERN CALIFORNIA

TYPICAL EXPANSION JOINT FILLER PROTECTION FOR OVERCROSSING OF M.W.D. PIPELINE

DRAWN ____ RECOMMENDED ____
TRACED ____
CHECKED ____ APPROVED ____

C-11632

11-67 DIETERICH-POST BLUEPRINT 1023

UNITED STATES ENVIRONMENTAL PROTECTION AGENCY
REGION IX
75 Hawthorne Street
San Francisco, CA 94105

APR - 5 2011

Amy Witherall
SCAO-7300
Bureau of Reclamation
Southern California Area Office
27708 Jefferson Avenue, Suite 202
Temecula, CA 92590

Subject: Draft Environmental Impact Statement for the Riverside-Corona Feeder Project, Bunker Hill Groundwater Basin, San Bernardino and Riverside Counties, California (CEQ #20110017)

Dear Ms. Witherall:

The U.S. Environmental Protection Agency (EPA) has reviewed the above referenced document. Our review and comments are provided pursuant to the National Environmental Policy Act (NEPA), the Council on Environmental Quality (CEQ) Regulations (40 CFR Parts 1500-1508), and our NEPA review authority under Section 309 of the Clean Air Act (CAA). Our comments are provided in accordance with your approval on March 16th of an informal EPA-specific extension to the comment deadline date from March 22, 2011 to April 5, 2011. We greatly appreciate the additional time to conduct our review.

The Bureau of Reclamation (BOR) proposes to provide funds for the Riverside-Corona Feeder Project (RCF), an aquifer storage and recovery project (conjunctive use), planned by Western Municipal Water District (Western). The project includes new groundwater extraction wells and a 28-mile water distribution pipeline with pump stations and a reservoir storage tank. The project is intended to improve Western's water supply reliability through managed storage, extraction, and distribution of local and imported water, using available groundwater capacity in the San Bernardino and Chino Groundwater Basins.

We have rated the Preferred Alternative -- Realignment Alternative with Additional Connections -- and the Draft EIS (DEIS) as Environmental Concerns - Insufficient Information (EC-2) (see the enclosed "Summary of Rating Definitions"). There are five large contaminated groundwater plumes in the San Bernardino Groundwater Basin and eleven plumes in the Chino Groundwater Basin. While EPA supports coordinated management of surface and groundwater resources, we are concerned with the potential direct and cumulative effects on groundwater quality, and the proponent's ability to ensure that replenishment and extraction of water does not result in adverse effects on drinking water supplies, the environment, other third party beneficial uses, or the remediation and management of contaminated groundwater plumes.

While this draft EIS proposes both a feeder line and approximately twenty new production wells, the information provided on well locations is very limited. EPA understands that the well drilling will be addressed in the permitting process, however, in light of the numerous contaminated groundwater plumes in the immediate vicinity of these wells, EPA has the following concerns: i) that the new production well might spread one or more of the contaminated plumes into a clean aquifer zone, thereby affecting existing clean production wells; and ii) that any potential contamination of previously clean wells will not be addressed until the level of contamination exceeds Drinking Water levels. The Final EIS (FEIS) should include additional information on the risk of contamination to existing groundwater or recharged imported water, and provide a clear process to address the above concerns.

EPA encourages local and regional efforts to enhance water supply reliability, provided proposed actions are consistent with a balanced water supply and demand strategy, based upon a reliable developed water supply, and do not have adverse effects on the environment or third party beneficial uses. Conjunctive use of surface and groundwater, whereby excess surface water is stored in the groundwater aquifer for later recovery when surface water resources are scarce, can be an effective means to ensure a more reliable supply. Accurate monitoring, accounting, and active management of the aquifer are key in preventing adverse effects. We recommend that BOR include in the FEIS a detailed description of the proposed operations, monitoring, accounting, and management procedures of the proposed RCF.

EPA advocates sustainable water supply management, which balances existing water supply with demand. Sustainable water use makes efficient use of currently developed water through conservation, reuse, and recycling; manages ground water to avoid long-term overdraft and reduction in quality; encourages users to diversify water management strategies; and promotes compatible multiple benefits of water use (for example, productive agriculture and wildlife habitat). Voluntary water exchanges and transfers that have no significant socio-economic or environmental impacts also have a role in ensuring a sustainable water supply. We recommend the FEIS describe current and planned demand-side management strategies to promote sustainable water use and a reliable water supply for this region.

EPA appreciates the opportunity to provide comments on this conjunctive use project. We are available to discuss our recommendations. When the Final EIS (FEIS) is released for public review, please send one hard copy and one CD to the address above (Mail Code: CED-2). If you have any questions, please contact me at (415) 972-3521 or contact Laura Fujii, the lead reviewer for this Project. Laura can be reached at (415) 972-3852 or fujii.laura@epa.gov.

Sincerely,

Kathleen M. Goforth, Manager
Communities and Ecosystems Division

Enclosures: Summary of EPA Rating Definitions
EPA's Detailed Comments

Cc: Jack Safely, Western Municipal Water District
Matthew H. Litchfield, City of San Bernardino Municipal Water District

SUMMARY OF EPA RATING DEFINITIONS*

This rating system was developed as a means to summarize the U.S. Environmental Protection Agency's (EPA) level of concern with a proposed action. The ratings are a combination of alphabetical categories for evaluation of the environmental impacts of the proposal and numerical categories for evaluation of the adequacy of the Environmental Impact Statement (EIS).

ENVIRONMENTAL IMPACT OF THE ACTION

"LO" (Lack of Objections)

The EPA review has not identified any potential environmental impacts requiring substantive changes to the proposal. The review may have disclosed opportunities for application of mitigation measures that could be accomplished with no more than minor changes to the proposal.

"EC" (Environmental Concerns)

The EPA review has identified environmental impacts that should be avoided in order to fully protect the environment. Corrective measures may require changes to the preferred alternative or application of mitigation measures that can reduce the environmental impact. EPA would like to work with the lead agency to reduce these impacts.

"EO" (Environmental Objections)

The EPA review has identified significant environmental impacts that should be avoided in order to provide adequate protection for the environment. Corrective measures may require substantial changes to the preferred alternative or consideration of some other project alternative (including the no action alternative or a new alternative). EPA intends to work with the lead agency to reduce these impacts.

"EU" (Environmentally Unsatisfactory)

The EPA review has identified adverse environmental impacts that are of sufficient magnitude that they are unsatisfactory from the standpoint of public health or welfare or environmental quality. EPA intends to work with the lead agency to reduce these impacts. If the potentially unsatisfactory impacts are not corrected at the final EIS stage, this proposal will be recommended for referral to the Council on Environmental Quality (CEQ).

ADEQUACY OF THE IMPACT STATEMENT

"Category 1" (Adequate)

EPA believes the draft EIS adequately sets forth the environmental impact(s) of the preferred alternative and those of the alternatives reasonably available to the project or action. No further analysis or data collection is necessary, but the reviewer may suggest the addition of clarifying language or information.

"Category 2" (Insufficient Information)

The draft EIS does not contain sufficient information for EPA to fully assess environmental impacts that should be avoided in order to fully protect the environment, or the EPA reviewer has identified new reasonably available alternatives that are within the spectrum of alternatives analysed in the draft EIS, which could reduce the environmental impacts of the action. The identified additional information, data, analyses, or discussion should be included in the final EIS.

"Category 3" (Inadequate)

EPA does not believe that the draft EIS adequately assesses potentially significant environmental impacts of the action, or the EPA reviewer has identified new, reasonably available alternatives that are outside of the spectrum of alternatives analysed in the draft EIS, which should be analysed in order to reduce the potentially significant environmental impacts. EPA believes that the identified additional information, data, analyses, or discussions are of such a magnitude that they should have full public review at a draft stage. EPA does not believe that the draft EIS is adequate for the purposes of the NEPA and/or Section 309 review, and thus should be formally revised and made available for public comment in a supplemental or revised draft EIS. On the basis of the potential significant impacts involved, this proposal could be a candidate for referral to the CEQ.

*From EPA Manual 1640, Policy and Procedures for the Review of Federal Actions Impacting the Environment.

U.S. EPA DETAILED COMMENTS ON THE DRAFT ENVIRONMENTAL IMPACT STATEMENT FOR RIVERSIDE-CORONA FEEDER PROJECT, BUNKER HILL GROUNDWATER BASIN, SAN BERNARDINO AND RIVERSIDE COUNTIES, CA., APRIL 5, 2011

Groundwater Quality and Management

Include additional information on the risk of contamination to existing groundwater or recharged imported water. The Chino Basin extraction wells were added to the RCF to alleviate San Bernardino Basin water agency concerns with potential effects of the RCF on management and protection of San Bernardino Basin groundwater. Of major concern is the potential for the RCF to change contaminant plume movement, shape, and direction through its recharging and pumping, causing the plumes to migrate beyond their control wells and further contaminate groundwater (p. 4.7-19). EPA has similar concerns, especially given the presence of five large contaminated plumes inside and outside of the San Bernardino Basin (Newmark and Muscoy , Norton Air Force Base , Redlands-Crafton , Burlington Northern and Santa Fe (BNSF) , and Rialto Colton), and eleven plumes in the Chino Basin (Chino Airport, California Institute for Men (CIM), General Electric Flatiron Facility, General Electric Company's Engine Maintenance Center Test Cell Facility, Kaiser Steel Fontana Steel Site, Mid-Valley Sanitary Landfill, Milliken Sanitary Landfill, Municipal Wastewater Disposal Ponds, Upland Sanitary Landfill, Un-named VOC Plume – South of the Ontario Airport, Stringfellow NPL Site).

Recommendations:
The Final EIS (FEIS) should include additional information on the risk of contamination to existing groundwater or recharged imported water as a result of RCF operations. A process should be described that clearly outlines how each well will proceed through the permitting process, including an impact analysis that shows that the location and operation of the well would not impact any existing contaminated plumes. The impact analyses should address the following concerns:

i) That the new production well would not spread any of the contaminated plumes into a clean aquifer zone. (Toward this end, a system of monitoring wells would need to be identified for each proposed well location. These monitoring wells would provide both water level data for the capture analysis and chemistry data to detect any potential contaminated plume expansion.)

ii) That any detection of contaminants in previously clean wells should be addressed as soon as possible, rather than waiting until such time as the contaminant levels exceed the Drinking Water Permit standards.

In addition, the following issues should be addressed: state whether imported water, recharged into portions of the aquifer formerly occupied by contaminated plumes, could be contaminated by residual volatile organic compounds (VOC), perchlorate, trichloroethylene (TCE), or other contaminates. Describe the probable end uses, applicable drinking water standards, and proposed treatment of extracted water. We recommend the FEIS include a description of the horizontal and vertical location of the contaminated plumes in the aquifers, and their relative spatial relationship to the "cones of depression" of probable extraction wells. If applicable, describe past or present effects

of recharge and extraction of SWP water in the San Bernardino Basin and Chino Basin. If the information was provided in the 2005 PEIR, we recommend providing a summary of this information and any conclusions in the current FEIS.

Describe the effectiveness and feasibility of proposed remedies for project-contaminated wells and groundwater. The DEIS describes possible remedies to be implemented if monitoring and well testing reveal project contamination of existing or proposed well sites and groundwater. These remedies include appropriate use of the contaminated water, blending the poor quality water with better quality water, choosing another water production and/or spreading area, carefully managing where wells are operated to prevent or delay contamination, and installing barrier wells and/or wellhead treatment (p. 1.0-33). EPA recommends the FEIS provide additional details on how the mitigation measures will be selected, prioritized, and implemented. This will likely depend upon the contaminants that require mitigation, but some specifics can be provided.

Recommendations:
We recommend the FEIS include a description of the process whereby a specific baseline mitigation plan would be developed for each new production well. This mitigation plan would serve to identify the appropriate performance measures for identification of contaminated plume migration, allow immediate notice of violation, and lay out the specific response actions to be taken to remedy any problems identified. A baseline mitigation plan (as existed for the Newmark Groundwater Superfund Site) will allow immediate response action, while further analysis and negotiation take place to address the issue in the long term. This plan should describe the effectiveness and feasibility of these remedies in achieving the required water quality for the planned water use. For instance, describe wellhead treatment technologies and other remedies that would be used to achieve acceptable levels of VOC, perchlorate, TCE, and other contaminants of concern in extracted water.

Address how the project will be made to comply with future changes to water quality and drinking water standards, including those applying to chromium and hexavalent chromium. In the reasonably foreseeable future, the water quality standards for chromium will likely be changed and it is possible that a drinking water standard for hexavalent chromium will be promulgated. The California Office of Environmental Health Hazard Assessment (OEHHA) has recently released a revised draft public health goal (PHG) of 0.02 parts per billion (ppb) for hexavalent chromium, which is also known as chromium 6. The current MCL for chromium is 50 ppb. Establishing a PHG is the first step in the development of a new or revised maximum contaminant level (MCL). Since the PHG is so much lower than the current MCL, a new MCL could have a large effect on the project in the future.

Recommendation:
Development of a new MCL is a lengthy process and takes years to achieve. The FEIS should account for how the proposed project will be made to comply with any future changes in this regard, and planners should track potential water quality standards that may affect future development.

The FEIS should describe the process whereby the permitting agency and project proponent will identify, characterize, and mitigate water quality impacts from "emerging contaminants" that may be found in groundwater and/or have new regulatory limits imposed on their concentrations in groundwater. Mitigating emerging contaminants is particularly problematic to evaluate when the hazard from the emerging contaminant is recognized by the water supplier but the regulatory machinery has not provided a reference standard for mitigation.

Some of the information cited in Section 4.7 (p. 4.7-25) in regards to the Newmark groundwater plumes is not correct. The DEIS states that the capture requirement for the Newmarks plume is 80%, when, in fact, the capture requirements were 90% for the Newmark plume, 85% for the Muscoy intermediate plume, and 80% for the Muscoy shallow plume. At the present time, the performance of the remedies in place results in 100% capture of all three contaminated plumes. The Newmark Groundwater Site has an Institutional Control in place to require that all new wells or new operating conditions go through a permitting process to prove that the existing EPA remedies would not be affected.

Sustainable Water Supply Management

Include a description of RCF operations, monitoring, accounting, and management procedures. The RCF proposes conjunctive use of surface and groundwater, whereby purchased imported surface water will be stored in local groundwater aquifers for later recovery when surface water resources are scarce (p. 1.0-1). Conjunctive use can enhance water supply reliability, provided there is accurate monitoring, accounting, and active management of the aquifer to prevent adverse effects.

Recommendations:
The FEIS should include a detailed description of the proposed operations, monitoring, accounting, and management procedures of the proposed RCF. Include a detailed response to the City of San Bernardino Municipal Water District's concerns regarding conjunctive use of the San Bernardino Basin Area, especially the need for a Basin Conjunctive Use Policy.[1] If applicable, include information regarding conjunctive use in the Chino Basin, and whether the Chino Basin is also in need of a Conjunctive Use Policy. The FEIS should describe any existing and/or proposed national, state, and regional groundwater requirements that may apply to the proposed project, such as an aquifer recharge obligation to leave a percentage of replenished water in the aquifer, and raw water treatment requirements.

Describe how the RCF complies with sustainable water management principles. EPA advocates sustainable water supply management, which balances existing water supply with demand. Water conservation, efficient use, and diversification of water supply sources are key components of assuring a long-term, sustainable balance between available water supplies,

[1] See March 4, 2011 Letter from Matthew H. Litchfield, P.E., Director, Water Utility, City of San Bernardino Municipal Water Department to Fakrhi Manghi, Senior Water Resource Engineer, Western Municipal Water District.

ecosystem health, and water supply demand. Conjunctive use is but one tool in providing water management flexibility and water supply reliability.

Recommendations:
The FEIS should describe how the RCF will meet the following sustainable water management principles:

- Give priority to conservation, water recycling, use efficiency, water trading, and other alternatives to new or expanded storage. Additional water diversions should be approved only in the context of, and consistent with, efficient and environmentally protective use of developed supplies.
- Base water quantities for imported SWP water on long-term sustainable supply. Take into account environmental requirements and potential third-party adverse effects.
- Properly price the water supply. The water supply -- particularly any newly developed supplies-- should not be under-priced. Cheap water supplies are a disincentive to use water efficiently, and misrepresent the true cost of developing new supplies.

To maximize benefits and project flexibility, we recommend Western work with all interested parties to evaluate and integrate available tools for enhancing water management flexibility, supply reliability, and water quality. Other tools to consider for implementation, in conjunction with the RCF, include conservation, appropriate pricing, irrigation and water use efficiencies, operational flexibilities, market-based incentives, water acquisition, voluntary temporary or permanent land fallowing, wastewater reclamation and recycling, and short-term temporary water transfers.

The proposed RCF should be designed to accommodate future shifts in water policy and consideration of in-stream and other public interest beneficial uses in long-term water resource planning.

Describe benefits and effects of water transfers between local water agencies and groundwater basins. The Preferred Alternative includes connections with other local water districts' distribution systems. These connections would facilitate the transportation of water from one water agency to another and one groundwater basin to another basin (p. 1.0-2).

Recommendation:
The FEIS should describe and evaluate the potential benefits and effects of water transfers between local water agencies and groundwater basins.

Include a more rigorous evaluation of growth inducing impacts. The DEIS concludes that the RCF will not induce growth because it would not directly increase population or economic growth. The DEIS implies that Western is responding to projected growth within its service area (p. 7.0-2). However, no evaluation or data are provided to demonstrate that the project would not remove obstacles to growth or provide water service to areas not previously served. We note that the Western Replenishment and Extraction Agreement with the San Bernardino Valley Municipal Water District (SBVMWD) states that Western, at its option, may assign and transfer

its right to extract such imported water to any plaintiff in the Western case, and such assigned right shall be in addition to any right that such producer may hold, and shall not be constrained by the injunctive provisions of the Judgment in the Western case (Western Judgment)(See p. 6 of Western Replenishment and Extraction Agreement with SBVMWD for the RCF project, Appendix D).

- ***Recommendation:***
  The FEIS should include a more rigorous evaluation of growth inducing impacts. We recommend including a detailed evaluation and data demonstrating that the RCF project would not remove obstacles to growth or provide water service to areas not previously served.

DEPARTMENT OF PUBLIC WORKS

FLOOD CONTROL • LAND DEVELOPMENT & CONSTRUCTION
SOLID WASTE MANAGEMENT • SURVEYOR • TRANSPORTATION

COUNTY OF SAN BERNARDINO

825 East Third Street • San Bernardino, CA 92415-0835 • (909) 387-8104
Fax (909) 387-8130

GRANVILLE M. "BOW" BOWMAN, P.E., P.L.S.
Director of Public Works

March 29, 2011

File: 10(ENV)-4.01

Mr. Fakhri Manghi
Western Municipal Water District
14205 Meridian Parkway
Riverside, CA 92518

RE: NOTICE OF COMPLETION AND AVAILABILITY OF SUPPLEMENTAL ENVIRONMENTAL IMPACT REPORT/STATEMENT (SEIR/EIS) FOR THE RIVERSIDE-CORONA FEEDER REALIGNMENT

Dear Mr. Manghi:

Thank you for giving the San Bernardino County Department of Public Works (Department) the opportunity to comment on the above-referenced project. The environmental document was circulated to other Divisions within our Department and the following are their comments:

Water Resources Division (Mike Fox, P.E., (909) 387-8213):

1. We have reviewed the Notice and it appears that the drainage concerns have been adequately identified.

2. We recommend that the proposed pipeline be constructed in a manner not to alter the direction, elevation or capacity of any existing drainage facility, and that the line be placed below any drainage course scour depths.

3. It is assumed that the cities will establish adequate provisions for intercepting and conducting the accumulated drainage around and/or through the site areas in a manner which will not adversely affect properties adjacent to or downstream of the project areas.

4. The project should incorporate the most recent FEMA regulations for development in a floodplain and/or the Regulatory Floodway. These regulations should be enforced by the local agencies.

5. Prior to any encroachment on San Bernardino County Flood Control District (District) right-of-way, a permit shall be obtained from the District's Flood Control Operations Division, Permit Section. Other off-site or on-site improvements may be required which cannot be determined at this time.

6. U.S. Army Corps of Engineers' approval may also be required for work near the Santa Ana River. Information regarding the item can be obtained from the District's Flood Control Operations Division, Permit Section.

GREGORY C. DEVEREAUX
County Administrative Officer

Board of Supervisors
BRAD MITZELFELT ..... First District
PAUL BIANE ..... Second District
JOSIE GONZALES ..... Fifth District
NEIL DERRY ..... Third District
GARY C. OVITT ..... Fourth District

Traffic Planning Division (Ed Petre, P.E., (909) 387-8239):

1. The County of San Bernardino Traffic Division will require a construction management plan and a permit for any work within the County maintained road right of way.

2. 5.20b, Page 1-3 of the Addendum to the Traffic Impact Study Report, Riverside – Corona Feeder Realignment Project, states that the acceptable level of service is C. This is incorrect. The acceptable level of service in the valley unincorporated areas of the County is D. Where did the statement which states that a reduced level of service maybe accepted on a case by case basis with the four-fifths approval by the City Council come from?

If you have any questions or require additional information, please contact the specific individuals who provided that specific comment, as listed above.

Sincerely,

ANNESLEY IGNATIUS, P.E.
Deputy Director – Land Development & Construction

ARI:EH:mb/CEQA Comments to SEIR-EIS_Riverside-Corona Feeder Realignment Project.doc

cc: Erma Hurse, EMD
Reading file

Section 3 SEIR/EIS Notices and Distribution Documentation

California Home

Tuesday, April 12, 2011

Riverside Corona Feeder Realignment

SCH Number: 2003031121

Document Type: JD - Joint Document

Alternate Title: Riverside Corona Feeder (RCF) Project

Project Lead Agency: Western Municipal Water District

Project Description

The project is proposed to store excess imported water when it is available to increase firm water supplies, to improve water quality, and to reduce water costs. The project proposes to manage the groundwater levels through the construction of groundwater wells in the San Bernardino Basin Area and pumps to deliver the groundwater supply to water users. The project will also include a new water pipeline to serve portions of San Bernardino and Riverside counties. This system of storage, extraction and distribution will improve the reliability of WMWD's water supply through the managed storage and distribution of excess imported water and reduce possible water shortages during dry years through reduced dependence on imported water during dry year conditions. The achieve this purpose, the FCF project replenishes excess State Water Project (SWP) water supplied by Metropolitan Water District of Southern California (MWD) into the San Bernardino Groundwater Basin Area, and extracts and moves water throughout the region by way of interconnections between local groundwater basins.

Contact Information

Primary Contact:
Jack Safely
Western Municipal Water District
951 571 7100
14205 Meridian Parkway
Riverside, CA 92518

Project Location

County: Riverside, San Bernardino
City: Colton, Corona, Grand Terrace, Highland, Riverside, ...
Region:
Cross Streets: Various
Latitude/Longitude: 34° 04' 47" / 117° 17' 18" Map
Parcel No: Multiple
Township: 2S
Range: 6W
Section:
Base: SBB&M
Other Location Info:

Proximity To

Highways: I-15, I-10, SR-60, SR-91
Airports: Riverside, Flabob
Railways: BNSF, Southern Pacific
Waterways: Santa Ana River, Gage Canal
Schools:
Land Use: Various land uses, primarily road right-of-ways / Various / Various

---

Development Type

Water Facilities

Local Action

Other Action (Pipeline)

Project Issues

Aesthetic/Visual, Flood Plain/Flooding, Air Quality, Traffic/Circulation, Water Supply, Archaeologic-Historic, Biological Resources, Noise,

Toxic/Hazardous, Vegetation, Water Quality, Wetland/Riparian, Wildlife, Growth Inducing, Landuse, Cumulative Effects

---

Reviewing Agencies (Agencies in **Bold Type** submitted comment letters to the State Clearinghouse)

Resources Agency; Department of Conservation; **Department of Fish and Game, Region 6**; Cal Fire; Office of Historic Preservation; Department of Parks and Recreation; **Department of Water Resources**; California Highway Patrol; Caltrans, District 8; Department of Housing and Community Development; Air Resources Board, Major Industrial Projects; Regional Water Quality Control Board, Region 8; **Department of Toxic Substances Control**; California Energy Commission; Native American Heritage Commission; Public Utilities Commission

---

Date Received: 1/20/2011 **Start of Review:** 1/20/2011 **End of Review:** 3/7/2011

CEQAnet HOME | NEW SEARCH

California Home

Monday, Febuary 7, 2011

Riverside Corona Feeder

SCH Number: 2003031121

Document Type: SIR - Supplemental EIR

Alternate Title: Riverside Corona Feeder (RCF) Project

Project Lead Agency: Western Municipal Water District

Project Description

The project is proposed to store excess imported water when it is available to increase firm water supplies, to improve water quality, and to reduce water costs. The project proposes to manage the groundwater levels through the construction of groundwater wells in the San Bernardino Basin Area and pumps to deliver the groundwater supply to water users. The project will also include a new water pipeline to serve portions of San Bernardino and Riverside counties. This system of storage, extraction and distribution will improve the reliability of WMWD's water supply through the managed storage and distribution of excess imported water and reduce possible water shortages during dry years through reduced dependence on imported water during dry year conditions. The achieve this purpose, the FCF project replenishes excess State Water Project (SWP) water supplied by Metropolitan Water District of Southern California (MWD) into the San Bernardino Groundwater Basin Area, and extracts and moves water throughout the region by way of interconnections between local groundwater basins.

Contact Information

Primary Contact:
Jack Safely
Western Municipal Water District
951 571 7100
14205 Meridian Parkway
Riverside, CA 92518

Project Location

County: Riverside, San Bernardino
City: Colton, Corona, Grand Terrace, Highland, Riverside, ...
Region:
Cross Streets: Various
Latitude/Longitude: 34° 04' 47" / 117° 17' 18" Map
Parcel No: Multiple
Township: 2S
Range: 6W
Section:
Base: SBB&M
Other Location Info:

Proximity To

Highways: I-15, I-10, SR-60, SR-91
Airports: Riverside, Flabob
Railways: BNSF, Southern Pacific
Waterways: Santa Ana River, Gage Canal
Schools: Multiple
Land Use: Various land uses, primarily road right-of-ways / Various / Various

---

Development Type

Water Facilities

Local Action

Other Action

Project Issues

Archaeologic-Historic, Biological Resources, Noise, Toxic/Hazardous, Vegetation, Water Quality, Wetland/Riparian, Wildlife, Growth Inducing,

Landuse, Cumulative Effects

Reviewing Agencies (Agencies in **Bold Type** submitted comment letters to the State Clearinghouse)

Resources Agency; Department of Conservation; Department of Fish and Game, Region 6; Cal Fire; Office of Historic Preservation; Department of Parks and Recreation; Department of Water Resources; California Highway Patrol; Caltrans, District 8; Department of Housing and Community Development; Air Resources Board, Major Industrial Projects; Regional Water Quality Control Board, Region 8; Department of Toxic Substances Control; California Energy Commission; Native American Heritage Commission; Public Utilities Commission

---

Date Received: 1/20/2011 **Start of Review:** 1/20/2011 **End of Review:** 3/7/2011

CEQAnet HOME | NEW SEARCH

NOTICE OF COMPLETION & AVAILABILITY of a DRAFT SUPPLEMENTAL ENVIRONMENTAL IMPACT REPORT and DRAFT ENVIRONMENTAL IMPACT STATEMENT (SEIR/EIS) for the

Riverside-Corona Feeder Realignment
State Clearinghouse No. 2003031121
Department of Interior Filing No. DES 11-01

FILED
RIVERSIDE COUNTY
JAN 19 2011
LARRY W. WARD, CLERK
By M. Meyer
Deputy

To: Responsible Agencies, Trustee Agencies, and Interested Parties

WESTERN MUNICIPAL WATER DISTRICT

Lead Agency (CEQA):
Western Municipal Water District
14205 Meridian Parkway
Riverside, CA 92518

U.S. DEPARTMENT OF THE INTERIOR BUREAU OF RECLAMATION

Lead Agency (NEPA):
U.S. Department of Interior, Bureau of Reclamation
27708 Jefferson Ave., #202
Temecula, CA 92590

COUNTY CLERK
Neg Declaration/Ntc Determination
Filed Pursuant to 21152
POSTED
JAN 19 2011
Removed:
By:
Riverside County Clerk

Project Title: Riverside-Corona Feeder ("RCF") Realignment

Project Location: This project will include approximately 30 miles of major feeder pipeline and related facilities located from the city of San Bernardino, San Bernardino County on the northeast, to the city of Corona, Riverside County on the southwest. The project facilities will run northeast to southwest and generally parallel to the 215/91 Freeway and the Santa Ana River.

The majority of the project will be located within street rights-of-way in the Jurupa area of unincorporated Riverside County, portions of San Bernardino County, and cities of San Bernardino, Colton, Rialto, Riverside, and Corona, and crossing the Santa Ana River near Van Buren Boulevard in the city of Riverside. The project is within portions of Township 1 South, Range 4 West; Township 1 South, Range 5 West; Township 2 South, Range 5 West; Township 2 South, Range 6 West; Township 3 South, Range 5 West; and Township 3 South, Range 6 West; San Bernardino Base & Meridian. (From approximately Latitude/Longitude: 34°04' 47" North/117° 17' 18" West to approximately Latitude/Longitude: 33°54' 21" North/117° 25' 25" West.)

Project Description: Western Municipal Water District (WMWD) is proposing to build the Riverside-Corona Feeder ("RCF") project which includes a large-capacity water pipeline ranging in diameter up to 78 inches, up to 20 new and existing wells, and appurtenant facilities associated with aquifer storage and recovery. The project includes federal funding through the Bureau of Reclamation.

The proposed project is a realignment of the RCF previously evaluated in the *Final Programmatic Environmental Impact Report for the Riverside-Corona Feeder* (PEIR) certified in May 2005 (SCH #2003031121). The RCF would deliver water from the San Bernardino Groundwater Basin (Bunker Hill) and Chino groundwater basin (Chino Basin). Imported water supplies would be recharged into the Bunker Hill basin area for later use, taking advantage of available storage capacity. The realignment will not change the number of wells or the Bunker Hill groundwater extraction process described in the 2005 PEIR. Groundwater supplies are also available to the RCF realignment from the Chino Basin under the Optimum Basin Management Plan from existing desalter facilities.

The project originally included eight segments, Reaches A through H in the 2005 PEIR. The project, as currently proposed, realigns Reaches A through G, with Reach H remaining as proposed in the original project. Additional connection facilities were also added to the project in 2009, including a new well field for five (5) of the 20 wells located east of the well fields analyzed in 2005, two (2) additional pump stations, one (1) five-million gallon reservoir, and connecting pipelines. The Supplemental EIR analyzes those realigned/added facilities. The EIS analyzes the entire project, as noted following each facility listed below. The project includes the following segments and facilities from north to south:

- Central Feeder Connection – a pipeline connecting to the existing Central Feeder and an additional well field (SEIR/EIS)
- Northern Reach – pipeline and previously analyzed well field locations (SEIR/EIS)
- Central Reach – pipeline, a portion of which crosses the Santa Ana River (SEIR/EIS)
- Clay Street Connection – pump station and pipeline to connect project to Chino Basin desalter facilities (SEIR/EIS)

- Mockingbird Connection – pipelines, 5-million gallon reservoir, and pump station (former Reach E) (SEIR/EIS)
- Reach F[1] - pipeline (EIS)
- Reach G[1] – pipeline connecting to Arlington pump station (EIS)
- La Sierra Pipeline Connection – pipeline (SEIR/EIS)
- Reach H – pipeline (EIS)

Potentially Significant Environmental Effects: The Initial Study prepared and circulated for public review on the Riverside-Corona Feeder Pipeline Realignment project along with scoping input, concluded that the proposed project would not result in significant impacts to the following: Agricultural Resources, Geology/Soils, Mineral Resources, Population/Housing, Public Services, Recreation, and Utilities/Service Systems. These issue areas are not discussed further in the Draft SEIR/EIS.

The Draft SEIR/EIS analysis determined there would be no impacts or less than significant impacts related to long-term operational Air Quality, short-term greenhouse gas (GHG) emissions and consistency with the California Air Resources Board Scoping Plan, direct effects on Groundwater Quality, or Land Use/Planning due to the nature of project construction and operations, implementation of design considerations, and/or compliance with standard regulations. As a result, no mitigation measures are required.

The Draft SEIR/EIS determined that the following issue areas have potentially significant environmental impacts that will be mitigated to below a level of significance: Aesthetics, Biological Resources, Cultural Resources, Energy, Groundwater Levels, Indirect Groundwater Quality, Hazards and Hazardous Materials, Noise, Stormwater/Water Quality, and Transportation and Traffic.

The following issue areas have impacts that are significant and unavoidable requiring a statement of overriding considerations: short-term construction-related Air Quality and operational GHG. Emissions are below *de minimis* thresholds for federal Clean Air Act conformity applicability.

Potential cumulative impacts were analyzed and the conclusions are consistent with the project-specific effects listed above, except that long-term GHG effects may result in significant unavoidable cumulative impacts.

Listed Toxic Site: The project does not involve a toxic site listed pursuant to Government Code Section 65962.5.

Public Review: Copies of the Draft SEIR/EIS and all documents referenced therein are available for review at WMWD offices, 14205 Meridian Parkway, Riverside, CA 92518, from January 20, 2011 through March 8, 2011. A copy of the Draft SEIR/EIS is also available for public review at the following libraries: University of California at Riverside, Tomas Rivera Library, 3401 Watkins Drive, Riverside, CA 92521; City of Riverside, Arlington Branch Library, 9556 Magnolia Avenue, Riverside, California, 92503; Glen Avon Public Library, 9244 Galena Street, Riverside, CA 92509; Colton Public Library, 656 North 9th Street, Colton, CA 92324; Corona Public Library, 650 South Main Street, Corona, CA 92882; Mentone Library, 1870 Mentone Boulevard, Mentone, CA 92359; San Bernardino Public Library, 555 West 6th Street, San Bernardino, CA 92410; and on the WMWD website at www.wmwd.com.

Comments on the Draft SEIR/EIS may be made in writing, and should be sent no later than **March 8, 2011** to:

LEAD AGENCY (CEQA):
Fakhri Manghi, Senior Water Resource Engineer
Western Municipal Water District
14205 Meridian Parkway
Riverside, CA 92518
fmanghi@wmwd.com

The National Environmental Protection Act review is being conducted concurrently with the California Environmental Quality Act process. A notice has been published in the Federal Register and the draft document is also available at the Bureau of Reclamation, Southern California Area Office, 27708 Jefferson Avenue, Suite 202, Temecula, CA 92590 and on the Reclamation website at http:www.usbr.gov/lc/socal/envdocs.html.

[1] Reaches E, F, and G were re-evaluated and **Reaches F and G** were refined slightly in 2007, as analyzed in the *Final Environmental Impact Report for the La Sierra Avenue Water Transmission Pipeline Project* (SCH #2006101152) which was certified by WMWD on February 20, 2008. The refined alignment for Reaches F and G will remain consistent with the approvals in this 2008 Refinement EIR.

KANSAS

Shawnee County

Ritchie, John & Mary, House, 1116 SE. Madison St, Topeka, 10001210

MONTANA

Missoula County

Missoula Downtown Historic District (Boundary Increase—Decrease), (Missoula MPS) Higgins Ave. & Front St., Missoula, 10001206

OHIO

Champaign County

Kiser Mansion, 149 E. Main St, Saint Paris, 10001211

Geauga County

Pebblebrook Farm House and Gardens, 12525 Heath Rd., Chesterland, 10001212

Hamilton County

Kroger Barnes Graf, Gretchen, House, 9575 Cunningham Rd., Indian Hill, 10001213

Trumbull County

Chalker High School, 4432 OH 305, Southington, 10001214

OREGON

Lane County

McKenzie Highway Historic District, OR 242, Belknap Springs, 10001215

PUERTO RICO

Bayamon Municipality

Casa Dr. Agustin Stahl Stamm, 14 Jose Marti St., Bayamon, 10001216

Santa Isabel Municipality

Brumbaugh, Dr. Martin G., Graded School, (Early Twentieth Century Schools in Puerto Rico TR) 33 Eugenio M. de Hostos St., Santa Isabel, 10001217

RHODE ISLAND

Providence County

Church Hill Industrial District (Boundary Increase), 60 Dexter St., 125 Goff Ave., 265 Pine St., Pawtucket, 10001218

SOUTH CAROLINA

Aiken County

Oakland Plantation, 2930 Storm Branch Rd., Beech Island, 10001219

Richland County

Columbia Electric Street Railway, Light & Power Substation, 1337 Assembly St., Columbia, 10001220

TEXAS

Burnet County

Park Road 4 Historic District, Park Rd. 4 from US 281 to TX 29 & Longhorn Cavern State Park, Burnet, 10001221

Matagorda County

Blessing Masonic Lodge No. 411, 619 Ave. B/FM 616, Blessing, 10001222

Holman, Judge William Shields, House, 2504 Ave. K, Bay City, 10001223

Travis County

Norwood Tower, 114 W. 7th St., Austin, 10001224

WEST VIRGINIA

Fayette County

New Deal Resources in Hawk's Nest State Park Historic District, (New Deal Resources in West Virginia State Parks and Forests MPS) 49 Hawks Nest State Park Rd., Anstead, 10001225

Hardy County

New Deal Resources in Lost River State Park Historic District, (New Deal Resources in West Virginia State Parks and Forests MPS) 321 Park Dr., Mathais, 10001226

Pocahontas County

New Deal Resources in Watoga State Park Historic District, (New Deal Resources in West Virginia State Parks and Forests MPS) HC 82 (9 mi. SW. of WV 39), Marlinton, 10001227

Webster County

New Deal Resources in Holly River State Park Historic District, (New Deal Resources in West Virginia State Parks and Forests MPS) WV 20 (32 mi. S. of US 33), Hacker Valley, 10001228

WISCONSIN

Dodge County

Paramount Knitting Company Mill, 222 Madison St., Beaver Dam, 10001229

OTHER ACTIONS

Request for REMOVAL has been made for the following resources:

ARIZONA

Maricopa County

Archeological Site No. AZ U:10:61(ASM) Address Restricted, Mesa, 95000753

OREGON

Marion County

Breitenbush Guard Station, Willamette National Forest, Detroit, 86000843

[FR Doc. 2011–1092 Filed 1–19–11; 8:45 am]

BILLING CODE 4312–51–P

DEPARTMENT OF THE INTERIOR

Bureau of Reclamation

Bunker Hill Groundwater Basin, Riverside-Corona Feeder Project, San Bernardino and Riverside Counties, CA

AGENCY: Bureau of Reclamation, Interior.

ACTION: Notice of availability.

SUMMARY: Pursuant to the National Environmental Policy Act (NEPA) and the California Environmental Quality Act (CEQA), the Bureau of Reclamation (Reclamation) and the Western Municipal Water District (Western) have prepared a Supplemental Draft Environmental Impact Report and a Draft Environmental Impact Statement (SDEIR/DEIS) for the proposed Riverside-Corona Feeder (RCF) Project. Interested parties are invited to comment on the SDEIR/DEIS.

The Federal action will provide funds for a proposed aquifer storage and recovery project, including new groundwater wells and a 28-mile water pipeline with pump stations and a reservoir storage tank. The project is intended to improve the reliability of Western's water supply through managed storage, extraction and distribution of local and imported water supplies, using available capacity in the Bunker Hill Groundwater Basin and the Chino Basin.

DATES: Submit written comments on the SDEIR/DEIS by March 22, 2011.

ADDRESSES: Send written comments to Mrs. Amy Witherall, SCAO–7300, Bureau of Reclamation, Southern California Area Office, 27708 Jefferson Avenue, Suite 202, Temecula, CA 92590; facsimile (951) 695–5319; e-mail: *awitherall@usbr.gov.*

FOR FURTHER INFORMATION CONTACT: Mrs. Amy Witherall, telephone (951) 695–5310; facsimile (951) 695–5319; e-mail: *awitherall@usbr.gov.*

SUPPLEMENTARY INFORMATION: The SDEIR/DEIS can be downloaded from our Web site: *http://www.usbr.gov/lc/socal/envdocs.html.* Copies are also available for public review and inspection at the following locations:

- Bureau of Reclamation, Lower Colorado Regional Office, 500 Fir Street, Boulder City, Nevada 89005
- Bureau of Reclamation, Southern California Area Office, 27708 Jefferson Avenue, Suite 202, Temecula, California 92590
- Western Municipal Water District, 14205 Meridian Parkway, Riverside, California 92518
- San Bernardino Public Library, 555 West 6th Street, San Bernardino, California 92410
- Corona Public Library, 650 South Main Street, Corona, California 92882
- Riverside Public Library, 9556 Magnolia Avenue, Riverside, California 92503

Authority

This notice is provided pursuant to NEPA, 42 U.S.C. 4332(2)(c), and Department of the Interior regulations for the implementation of NEPA, 43 CFR Part 46.

Section 9112 of the Omnibus Public Land Management Act of 2009 (Public Law 111–11, 123 Stat. 1318), signed by the President on March 30, 2009, authorizes the Secretary of the Interior, in cooperation with Western, to participate in the planning, design, and construction of the Riverside-Corona Feeder Project including: (i) 20 groundwater wells; (ii) groundwater treatment facilities; (iii) water storage and pumping facilities; and (iv) 28 miles of pipeline in San Bernardino and Riverside Counties in the State of California.

Background

The proposed project will install up to 20 groundwater wells in the Bunker Hill Groundwater Basin, San Bernardino County, California. Existing recharge basins will be used to store imported water and local Santa Ana River flows in the Bunker Hill Groundwater Basin when supplies are available. The stored groundwater will be extracted later for delivery to communities in Western's service area in Riverside County, California, via 28 miles of pipeline ranging in diameter up to 78 inches, capable of delivering up to 40,000 acre-feet per year of groundwater at 100 cubic feet per second. The first phase of the project will also provide access to groundwater from the Chino Basin in San Bernardino County.

The currently proposed RCF alignment is a modification to a project previously evaluated by Western in 2005 and revised in 2008. The original project included eight segments, Reaches A through H, analyzed in the Programmatic Environmental Impact Report (PEIR) for the Riverside-Corona Feeder, California State Clearinghouse (SCH) No. 2003031121, certified by Western on May 18, 2005. Reaches E, F, and G were refined slightly in 2007 and evaluated in the Environmental Impact Report for the La Sierra Avenue Water Transmission Pipeline Project (SCH No. 2006101152), certified by Western on February 20, 2008. Western issued a Notice of Preparation of a draft Supplemental Program EIR on July 30, 2008, to evaluate a change in the pipeline alignment. Reclamation issued a Notice of Intent (NOI) to prepare an Environmental Impact Statement on February 24, 2010 (75 FR 8395).

The new alignment will not change the number of wells or the Bunker Hill groundwater extraction described in the 2005 PEIR, but will now allow Western to access available groundwater from existing desalter facilities in Chino Basin under an approved Optimum Basin Management Plan. The current project includes realignment of Reaches A through D, now referred to as the Northern and Central Reaches, with Reach H remaining as proposed in the original project. The refined alignment for Reaches E, F, and G will remain consistent with the approvals in the 2008 EIR.

Additional connection facilities were added to the project including a new well field for five (5) of the 20 wells, two (2) additional pump stations, one (1) five-million gallon reservoir, and connecting pipelines.

Reclamation is incorporating the two previous CEQA Environmental Impact Reports by reference. They are included as appendices to the draft SDEIR/DEIS.

Public Disclosure

Before including your name, address, phone number, e-mail address, or other personal identifying information in your comment, you should be aware that your entire comment—including your personal identifying information—may be made publicly available at any time. While you can ask us in your comment to withhold your personal identifying information from public review, we cannot guarantee that we will be able to do so.

Dated: January 13, 2011.

Lorri Gray-Lee,

Regional Director, Lower Colorado Region.

[FR Doc. 2011–1127 Filed 1–19–11; 8:45 am]

BILLING CODE 4310–MN–P

DEPARTMENT OF JUSTICE

Notice of Lodging of Consent Decree Under The Clean Air Act

Notice is hereby given that on January 13, 2011, a proposed Consent Decree in *United States et al.* v. *Northern Indiana Public Service Co.,* Civil Action No. 2:11–cv–016, was filed with the United States District Court for the Northern District of Indiana.

In this action, the United States and Indiana sought penalties and injunctive relief for the Defendants' violations of the Clean Air Act, 42 U.S.C. 7401 *et seq.,* and the Indiana Code 13–13–5–1 and 13–13–5–2, at its four coal-fired power plants in Chesterton, Michigan City, Wheatfield, and Gary, Indiana.

To resolve the United States' and Indiana's claims, the Defendants will pay a penalty of $3.5 million, and will install or upgrade air emission controls at three of its plants, and cease operations at its fourth plant in Gary, Indiana. In addition, the Defendant will perform environmental mitigation projects costing at least $9.5 million.

The Department of Justice will receive for a period of thirty (30) days from the date of this publication comments relating to the Consent Decree. Comments should be addressed to the Assistant Attorney General, Environment and Natural Resources Division, and either e-mailed to *pubcomment-ees.enrd@usdoj.gov* or mailed to P.O. Box 7611, U.S. Department of Justice, Washington, D.C. 20044–7611, and should refer to either: *United States et al.* v. *Northern Indiana Public Service Co.,* Civil Action No. 2:11–cv–016, or D.J. Ref. 90–5–2–1–08417. The Consent Decree may be examined at the Office of the United States Attorney, Northern District of Indiana, 5400 Federal Plaza, Suite 1500, Hammond, Indiana 46320, and at the United States Environmental Protection Agency, 77 W. Jackson Blvd., Chicago, Illinois 60604. During the public comment period, the Consent Decree may also be examined on the following Department of Justice Web site, *http://www.usdoj.gov/enrd/Consent_Decrees.html.* A copy of the Consent Decree may also be obtained by mail from the Consent Decree Library, P.O. Box 7611, U.S. Department of Justice, Washington, DC 20044–7611 or by faxing or e-mailing a request to Tonia Fleetwood (*tonia.fleetwood@usdoj.gov*), fax no. (202) 514–0097, phone confirmation number (202) 514–1547. In requesting a copy from the Consent Decree Library, please enclose a check, payable to the U.S. Treasury, in the amount of $26.00 (25 cents per page

About Western

Press Releases & Media Coverage

Below are Western press releases. Click on the topic you are interested in for full details. ***For Western's FACT sheet, click here.***

Adobe Acrobat Reader

You will need Adobe Acrobat Reader to view PDF files - just click the above PDF icon to download Adobe Acrobat Reader.

Board of Directors
Calendar
California Form 801
Community Involvement
Current Board Packets
Employment
Financial Info
Frequently Asked Questions
History & Background
Legislation
Maps & Boundaries
Newsroom
Online Payments
Public Records Request
Surplus Property
Wholesale Customers

Reclamation, Western MWD Seek Comments on Riverside-Corona Feeder Project Supplemental Draft EIR/Draft EIS

TEMECULA, CA. The Bureau of Reclamation and Western Municipal Water District are seeking comments on a supplemental draft environmental impact report/draft environmental impact statement (SDEIR/DEIS) for the construction of a proposed aquifer storage and recovery project. The project is designed to help supply water to up to 80,000 families in California's Riverside and San Bernardino counties. An electronic copy of the draft document is available at: www.usbr.gov/lc/socal/envdocs.html.

Western Director Evans to chair powerful MWD committee

RIVERSIDE, CA – January 11, 2011 – Thomas P. Evans, Western Municipal Water District's board member and agency representative to the Metropolitan Water District of Southern California, will serve as Chairman of Metropolitan's influential Engineering and Operations Committee for 2011. The appointment also places Director Evans on Metropolitan's Executive Board Committee.

Western, EPA Team Up to Solve America's Worst Water Quality

Press Releas

Current

Archives

2010
2009
2008
2007
2006
2005
2004

WESTERN MUNICIPAL WATER DISTRICT Online
WESTERN HOMEPAGE
ABOUT WESTERN
WATER SERVICES
WASTEWATER SERVICES
CONSERVE & EDUCATE
RESOURCE MANAGEMENT
DOING BUSINESS

Fun For Kids

Western Contacts
Search Western

It is the mission of Western Municipal Water District to provide water supply, wastewater disposal and water resource management to the public in a safe, reliable, financially responsible and environmentally sensitive manner.

02-377

SAN BERNARDINO COUNTY SUN

This space for filing stamp only

4030 N GEORGIA BLVD, SAN BERNARDINO, CA 92407
Telephone (909) 889-9666 / Fax (909) 885-1253

LISA LEMOINE
ALBERT A. WEBB ASSOCIATES
3788 MCCRAY ST
RIVERSIDE, CA - 92506-2973

SBS#: 2027858

PROOF OF PUBLICATION

(2015.5 C.C.P.)

State of California)
County of SAN BERNARDINO) ss

Notice Type: GPN - GOVT PUBLIC NOTICE

Ad Description: PROJECT: RIVERSIDE-CORONA FEEDER ("RCF") REALIGNMENT

I am a citizen of the United States and a resident of the State of California; I am over the age of eighteen years, and not a party to or interested in the above entitled matter. I am the principal clerk of the printer and publisher of the SAN BERNARDINO COUNTY SUN, a newspaper published in the English language in the city of SAN BERNARDINO, county of SAN BERNARDINO, and adjudged a newspaper of general circulation as defined by the laws of the State of California by the Superior Court of the County of SAN BERNARDINO, State of California, under date 06/20/1952, Case No. 73084. That the notice, of which the annexed is a printed copy, has been published in each regular and entire issue of said newspaper and not in any supplement thereof on the following dates, to-wit:

01/20/2011

Executed on: 01/20/2011
At Los Angeles, California

I certify (or declare) under penalty of perjury that the foregoing is true and correct.

Helen Tang

Signature

NOTICE OF COMPLETION & AVAILABILITY of a DRAFT SUPPLEMENTAL ENVIRONMENTAL IMPACT REPORT and DRAFT ENVIRONMENTAL IMPACT STATEMENT (SEIR/EIS) for the Riverside-Corona Feeder Realignment State Clearinghouse No. 2003031121 Department of Interior Filing No. DES 11-01

To: Responsible Agencies, Trustee Agencies, and Interested Parties

Lead Agency (CEQA):
Western Municipal Water District
14205 Meridian Parkway
Riverside, CA 92518

Lead Agency (NEPA):
U.S. Department of Interior,
Bureau of Reclamation
27708 Jefferson Ave., #202
Temecula, CA 92590

Project Title: Riverside-Corona Feeder ("RCF") Realignment
Project Location: This project will include approximately 30 miles of major feeder pipeline and related facilities located from the city of San Bernardino, San Bernardino County on the northeast, to the city of Corona, Riverside County on the southwest. The project facilities will run northeast to southwest and generally parallel to the 215/91 Freeway and the Santa Ana River.

The majority of the project will be located within street rights-of-way in the Jurupa area of unincorporated Riverside County, portions of San Bernardino County, and cities of San Bernardino, Colton, Rialto, Riverside, and Corona, and crossing the Santa Ana River near Van Buren Boulevard in the city of Riverside. The project is within portions of Township 1 South, Range 4 West; Township 1 South, Range 5 West; Township 2 South, Range 5 West; Township 2 South, Range 6 West; Township 3 South, Range 5 West; and Township 3 South, Range 6 West; San Bernardino Base & Meridian. (From approximately Latitude/Longitude: 34?04' 47" North/117? 17' 18" West to approximately Latitude/Longitude: 33?54' 21" North/117? 25' 25" West.)
Project Description: WesternMunicipal Water District (WMWD) is proposing to build the Riverside-Corona Feeder ("RCF") project which includes a large-capacity water pipeline ranging in diameter up to 78 inches, up to 20 new and existing wells, and appurtenant facilities associated with aquifer storage and recovery. The project includes federal funding through the Bureau of Reclamation.
The proposed project is a realignment

* A 0 0 0 0 0 2 0 2 3 5 6 5 *

storage and recovery. The project includes federal funding through the [illegible]

of the RCF previously evaluated in the Final Programmatic Environmental Impact Report for the Riverside-Corona Feeder (PEIR) certified in May 2005 (SCH #2003031121). The RCF would deliver water from the San Bernardino Groundwater Basin (Bunker Hill) and Chino groundwater basin (Chino Basin). Imported water supplies would be recharged into the Bunker Hill basin area for later use, taking advantage of available storage capacity. The realignment will not change the number of wells or the Bunker Hill groundwater extraction process described in the 2005 PEIR. Groundwater supplies are also available to the RCF realignment from the Chino Basin under the Optimum Basin Management Plan from existing desalter facilities.

The project originally included eight segments, Reaches A through H in the 2005 PEIR. The project, as currently proposed, realigns Reaches A through G, with Reach H remaining as proposed in the original project. Additional connection facilities were also added to the project in 2009, including a new well field for five (5) of the 20 wells located east of the well fields analyzed in 2005, two (2) additional pump stations, one (1) five-million gallon reservoir, and connecting pipelines. The Supplemental EIR analyzes those realigned/added facilities. The EIS analyzes the entire project, as noted following each facility listed below. The project includes the following segments and facilities from north to south:

- Central Feeder Connection – a pipeline connecting to the existing Central Feeder and an additional well field (SEIR/EIS)
- Northern Reach – pipeline and previously analyzed well field locations (SEIR/EIS)
- Central Reach – pipeline, a portion of which crosses the Santa Ana River (SEIR/EIS)
- Clay Street Connection – pump station and pipeline to connect project to Chino Basin desalter facilities (SEIR/EIS)
- Mockingbird Connection – pipelines, 5-million gallon reservoir, and pump station (former Reach E) (SEIR/EIS)
- Reach F[1] - pipeline (EIS)
- Reach G[1] – pipeline connecting to Arlington pump station (EIS)
- La Sierra Pipeline Connection – pipeline (SEIR/EIS)
- Reach H – pipeline (EIS)

Potentially Significant Environmental Effects: The Initial Study prepared and circulated for public review on the Riverside-Corona Feeder Pipeline Realignment project along with scoping input, concluded that the proposed project would not result in significant impacts to the following: Agricultural Resources, Geology/Soils, Mineral Resources, Population/Housing, Public Services, Recreation, and Utilities/Service Systems. These issue areas are not discussed further in the Draft SEIR/EIS.

The Draft SEIR/EIS analysis determined there would be no impacts or less than significant impacts related to long-term operational Air Quality, short-term greenhouse gas (GHG) emissions and consistency with the California Air Resources Board Scoping Plan, direct effects on Groundwater Quality, or Land Use/Planning due to the nature of project construction and operations, implementation of design considerations, and/or compliance with standard regulations. As a result, no mitigation measures are required.

The Draft SEIR/EIS determined that the following issue areas have potentially significant environmental impacts that will be mitigated to below a level of significance: Aesthetics, Biological Resources, Cultural Resources, Energy, Groundwater Levels, Indirect Groundwater Quality, Hazards and Hazardous Materials, Noise, Stormwater/Water Quality, and Transportation and Traffic.

The following issue areas have impacts that are significant and unavoidable requiring a statement of overriding considerations: short-term construction-related Air Quality and operational GHG. Emissions are below de minimis thresholds for federal Clean Air Act conformity applicability.

Potential cumulative impacts were analyzed and the conclusions are consistent with the project-specific effects listed above, except that long-term GHG effects may result in significant unavoidable cumulative impacts.

Listed Toxic Site: The project does not involve a toxic site listed pursuant to Government Code Section 65962.5.

Public Review: Copies of the Draft SEIR/EIS and all documents referenced therein are available for review at WMWD offices, 14205 Meridian Parkway, Riverside, CA 92518, from January 20, 2011 through March 8, 2011. A copy of the Draft SEIR/EIS is also available for public review at the following libraries: University of California at Riverside, Tomas Rivera Library, 3401 Watkins Drive, Riverside, CA 92521; City of Riverside, Arlington Branch Library, 9556 Magnolia Avenue, Riverside, California, 92503; Glen Avon Public Library, 9244 Galena Street, Riverside, CA 92509; University of California at Riverside, Tomas Rivera Library, 3401 Watkins Drive, Riverside, CA 92521; Colton Public Library, 656 North 9th Street, Colton, CA 92324; Corona Public Library, 650 South Main Street, Corona, CA 92882; Mentone Library, 1870 Mentone Boulevard, Mentone, CA 92359; San Bernardino Public Library, 555 West 6th Street, San Bernardino, CA 92410; and on the WMWD website at www.wmwd.com.

Comments on the Draft SEIR/EIS may be made in writing, and should be sent no later than **March 8, 2011** to:

LEAD AGENCY (CEQA):
Fakhri Manghi, Senior Water Resource Engineer
Western Municipal Water District
14205 Meridian Parkway
Riverside, CA 92518
fmanghi@wmwd.com

The National Environmental Protection Act review is being conducted concurrently with the California Environmental Quality Act process. A notice has been published in the Federal Register and the draft document is also available at the Bureau of Reclamation, Southern California Area Office, 27708 Jefferson Avenue, Suite 202, Temecula, CA 92590 and on the Reclamation website at http: www.usbr.gov/lc/socal/envdocs.html.

1/20/11

SBS-2027858#

and on the Reclamation website at http:www.usbr.gov/lc/socal/envdocs.html.
1/20/11

SBS-2027858#

Riverside-Corona Feeder Project
Distribution Schedule

Agency/Company	Name	Address1	City/State/Zip	Zip
Jurupa Area Recreation and Park District	Dan Rodriguez, General Manag	4810 Pedley Road	Riverside, CA 92509	92509
Arlington Community Center	Phyllis Wells	3680 Taft Street	Riverside, CA 92503-4979	92503
California Baptist University	Environmental Review	8432 Magnolia Avenue	Riverside, CA 92504	92504
California State Park and Recreation Commission	Environmental Review	1416 9th Street, PO Box 942896	Sacramento, CA 95814	95814
City of Anaheim	Sheri Vander Dussen, Planning	200 S. Anaheim Blvd.	Anaheim, CA 92805	92805
City of Banning	Zai Abu Bakar, Director of Com	99. E. Ramsey St.	Banning, CA 92220-0090	92220
City of Beaumont	Ernest Egger, Director of Planni	550 E. Sixth St.	Beaumont, CA 92223	92223
City of Blythe	Jennifer Wellman, Planning Dir	235 N. Broadway	Blythe, CA 92225	92225
City of Calimesa	Gus Romo, Community Develop	908 Park Avenue	Calimesa, CA 92320	92320
City of Canyon Lake	Mario Suarez, City Planner	31516 Railroad Canyon Rd.	Canyon Lake, CA 92587	92587
City of Cathedral City	Liesa Lukes, City Planner	68-700 Avenida Lalo Guerrero	Cathedral City, CA 92234	92234
City of Chino	Charles E. Coe, AICP, Commun	13220 Central Avenue	Chino, CA 91710	91710
City of Chino Hills	Christine Kelly, Community De	2001 Grand Avenue	Chino Hills, CA 91709-4868	91709
City of Coachella	Carmen Manriquez, Community	1515 Sixth St.	Coachella, CA 92236	92236
City of Desert Hot Springs	Steven Mendoza, Community D	65-950 Pierson Blvd.	Desert Hot Springs, CA 92240	92240
City of Fontana	Don Williams, Director of Com	8383 Sierra Avenue	Fontana, CA 92335	92335
City of Hemet	Richard Masyczek, Planning Di	445 E. Latham Avenue	Hemet, CA 92543	92543
City of Indian Wells	Corrie Kates, Community Devel	44-950 El Dorado Dr.	Indian Wells, CA 92210-7497	92210
City of Indio	Steve Copenhaver, Director of C	100 Civic Center Mall	Indio, CA 92201	92201
City of La Quinta	Les Johnson, Planning Director	78-495 Calle Tampico	La Quinta, CA 92253	92253
City of Loma Linda	Deborah Woldruff, Community	25541 Barton Road	Loma Linda, CA 92354	92354
City of Moreno Valley	John Terrell, Planning Official	14177 Frederick St.	Moreno Valley, CA 92553-96	92553
City of Murrieta	Mary Lanier, Community Devel	One Town Square, 24601 Jefferson Ave.	Murrieta, CA 92562	92562
City of Norco	Steve King, Director of Commu	2870 Clark Ave.	Norco, CA 92860	92860
City of Ontario	Jerry L. Blum, Planning Directo	303 East "B" Street	Ontario, CA 91764	91764
City of Palm Desert	Lauri Aylaian, community Deve	73-510 Fred Waring Dr.	Palm Desert, CA 92260	92260
City of Palm Springs	Craig Ewing, Director of Planni	3200 E. Tahquitz Canyon Way	Palm Springs, CA 92262	92262
City of Perris	Rene Avila, Interim Planning M	101 N. D St.	Perris, CA 92570-1917	92570
City of Rancho Mirage	Randal K. Bynder, Director	69-825 Hwy. 111	Rancho Mirage, CA 92270	92270
City of San Jacinto	Asher Hartel, AICP, Director of	595 S. San Jacinto Ave., Bldg A	San Jacinto, CA 92583	92583
City of Temecula	Patrick Richardson, Director of	43200 Business Park Dr.	Temecula, CA 92590	92590
City of Yorba Linda	Kurt Christiansen, Community I	4845 Casa Loma Avenue	Yorba Linda, CA 92885	92885
City of Yuma	Community Planning Division	One City Plaza, P.O. Box 13013	Yuma, AZ 85366-3013	85366
Community Foundation of Riverside Co.	Victoria Avenue Without Wires	3880 Lemon Street, Suite 300	Riverside, CA 92501	92501
County of Imperial	Jurg Heuberger	801 Main Street, Suite B-1	El Centro, CA 92243-2843	92243
County of La Paz	Scott Bernhart, Director Commu	1112 Joshua Ave., Ste. 202	Parker, AZ 85344	85344
Economic Development Agency	Robin Zimpfer	1325 Spruce Street, Suite 400	Riverside, CA 92507	92507
Endangered Habitats League	Dan Silver, Executive Director	8424-A Santa Monica Blvd., Ste. 592	Los Angeles, CA 90069-4267	90069
Pacific Bell	Larry Signaigo	3939 East Coronado Street	Anaheim, CA 92807	92807
Riv. Co. LAFCO	George J. Spilotis, Executive Di	3850 Vine Street, Ste. 110	Riverside, CA 92507-4277	92507
Riverside County Office of Education	Kenneth M. Young	3939 Thirteenth Street, PO Box 868	Riverside, CA 92501-3505	92501
San Bernardino Associated Governments	Deborah Robinson Barmack	1170 W. 3rd Street, 2nd Floor	San Bernardino, CA 92410-17	92410
San Diego County	Eric Gibson, Planning Director	5201 Ruffin Rd., Suite B	San Diego, CA 92123	92123
Sierra Club - San Gorgonio Chapter	Environmental Review	4079 Mission Inn Avenue	Riverside, CA 92501-3204	92501
Southern California Association of Governments	Eric H. Roth-Manager, Intergov	818 W. 7th St., 12th Floor	Los Angeles, CA 90017-3435	90017
Tomaras & Ogas, LLP	Brenda L. Tomaras	10755-F Scripps Poway Parkway #281	San Diego, CA 92131	92131
UCR Regents, Capital & Physical Planning	Timothy Ralston, A.V.C.	3595 Canyon Crest Drive, F101	Riverside, CA 92507-4277	92507
Union Pacific Railroad	Environmental Review	1400 Douglas Street	Omaha, NE 68179	68179
Victoria Avenue Forever	Hal Snyder	6475 Victoria Avenue	Riverside, CA 92506	92506
Victoria Avenue Restoration Project	Dan Hays	2640 Anna Street	Riverside, CA 92506	92506

A=Agency; C=County; E=Env; I=Individual; L=Library; N=Native American; S=State
G:\2007\07-0377\SEIR-EIS\Distribution and Notices\Distribution List 8-3-11 updated.xlsx

Riverside-Corona Feeder Project
Distribution Schedule

Western Riverside Council of Governments	Rick Bishop, AICP	4080 Lemon Street, 3rd Floor, MS 1032	Riverside, CA 92501-3609	92501
Pechanga Band of Luiseno Mission Indians	Laura Y. Miranda, Deputy Gene	P.O. Box 1477	Temecula, CA 92593	92593
Pechanga Band of Luiseno Mission Indians	Paul Macarro, Cultural Resource	PO Box 1477	Temecula, CA 92593	92593
Pechanga Cultural Resources Department	Anna Hoover	P.O. Box 2183	Temecula, CA 92593	92593
North Fork Water Company	Fred Stafford	1155 Del Rosa Avenue	San Bernardino, CA 92410	92410
Old Town Well Company	Allen Dangermond	912 Pacific Street	Redlands, CA 92373	92373
Soboba Band of Luiseño Indians	Erica Helms, Soboba Cultural R	P.O. Box 487	San Jacinto, CA 92581	92581
Soboba Cultural Resources Department	Darren Hill	PO Box 487	San Jacinto, CA 92581	92581
Alvord Unified School District	Wendel Tucker	10365 Keller Avenue	Riverside, CA 92505	92505
Audubon Society, San Bernardino Valley	Larry Lapre	P.O. Box 10973	San Bernardino, CA 92423-09	92423
Bear Valley Mutual Water Company	Mike Huffstutler	101 East Olive Avenue	Redlands, CA 92373-5249	92373
Best, Best & Krieger	Michell Ouellette	3750 University Avenue, Suite 400	Riverside, CA 92502	92502
Best, Best & Krieger	Jeffry F. Ferre	3750 University Avenue, Suite 400	Riverside, CA 92502	92502
Best, Best & Krieger	Jill Willis	3750 University Avenue, Suite 400	Riverside, CA 92502	92502
BNSF Railway Company	Robert E. Brendza, Director of I	740 East Carnegie Drive	San Bernardino, CA 92408	92408
CA Department of Water Resources, Div. of Operations & Maintenance	Leroy Ellinghouse, Chief	SWP Encroachments Section, 1416 9th Street, Rm. 641-1	Sacramento, CA 95814	95814
Cahuilla Band of Indians	Wendy Kitchen	PO Box 391760	Anza, CA 92539	92539
California Air Resources Board	CEQA Review	1001 I Street	Sacramento, CA 95812	95812
California Department of Conservation	CEQA Review	801 K Street, MS 24-01	Sacramento, CA 95814-3500	95814
California Department of Fish and Game, Inland Desert/Eastern Sierra Region	Leslie MacNair	3602 Inland Empire Blvd., Ste. C-220	Ontario, CA 91764	91764
California Department of Forestry & Fire Protection	CEQA Review	210 W. San Jacinto Avenue	Perris, CA 92570-1915	92570
California Department of Housing and Community Development	CEQA Review	3737 Main Street, Ste. 400	Riverside, CA 92501-3337	92501
California Department of Park & Recreation - Office of Historic Preservation	Daniel Abeyta/Cherilyn Widell	1416 9th Street, Room 902	Sacramento, CA 95814	95814
California Department of Toxic Substance Control	Ken Chiang	9211 Oakdale Avenue	Chatsworth, CA 91311-6505	91311
California Energy Commission	CEQA Review	1516 Ninth Street, Mail Stop 29	Sacramento, CA 95814-5504	95814
California Indian Legal Services	Environmental Review	609 S. Escondido Boulevard	Escondido, CA 92025	92025
California Native Plant Society	Environmental Review	2707 K Street, Suite I	Sacramento, CA 95816-5113	95816
California State Representatives 44th District	Representative Ken Calvert	3400 Central Avenue, Suie 200	Riverside, CA 92506	92506
CALTRANS, District #8	Office of Forecasting/IGR/CEQ	464 W. 4th St., 6th Floor, MS726	San Bernardino, CA 92401-14	92401
Chino Basin Watermaster	Ken Manning	9641 San Bernardino Rd	Rancho Cucamonga, CA 9173	91730
City of Colton	David R. Zamora, Director of C	650 N. La Cadena Drive	Colton, CA 92324	92324
City of Colton, Public Works	Amer Jakher	650 N. La Cadena Drive	Colton, CA 92324	92324
City of Colton, Water & Wastewater Dept	Mike Medina	650 N. La Cadena Drive	Colton, CA 92324	92324
City of Corona	Brad Robbins, Planning Directo	400 S. Vicentia Ave.	Corona, CA 92882	92882
City of Corona, Dept of Water & Power	Jonathan Daly	400 S. Vicentia Ave.	Corona, CA 92882	92882
City of Grand Terrace	Gary L. Koontz, Community De	22795 Barton Road	Grand Terrace, CA 92313-529	92313
City of Lake Elsinore	Rolfe Preisendanz, Community	130 S. Main St.	Lake Elsinore, CA 92530	92530
City of Redlands	Oscar Orci, Director of Commu	35 Cajon St.	Redlands, CA 92373	92373
City of Redlands, Municipal Utilities	Gary Vandorst	35 Cajon St. , Suite 15A	Redlands, CA 92373	92373

A=Agency; C=County; E=Env; I=Individual; L=Library; N=Native American; S=State
G:\2007\07-0377\SEIR-EIS\Distribution and Notices\Distribution List 8-3-11 updated.xlsx

Riverside-Corona Feeder Project
Distribution Schedule

City of Rialto	Michael Story, Development Se	150 S. Palm Avenue	Rialto, CA 92376	92376
City of Rialto, Public Works	Tim Mim Mack	335 W. Rialto Avenue	Rialto, CA 92376	92376
City of Riverside	Ken Gutierrez, Planning Directo	3900 Main St., 3rd Floor	Riverside, CA 92522	92522
City of Riverside Public Library, Arlington Branch	Reference Librarian	9556 Magnolia Avenue	Riverside, CA 92503	92503
City of Riverside, Planning Division	Doug Darnell	3900 Main St., 3rd Floor	Riverside, CA 92522	92522
City of Riverside, Public Utilities	Dieter Wirtzfeld	33901 Orange Street	Riverside, CA 92501	92501
City of Riverside, Public Utilities	Kevin Milligan	33901 Orange Street	Riverside, CA 92501	92501
City of Riverside, Public Works	Brian Nakamura, Director	3900 Main St., 3rd Floor	Riverside, CA 92522	92522
City of San Bernardino	Valerie C. Ross, Development S	300 N. "D" Street, 3rd Floor	San Bernardino, CA 92418	92418
City of San Bernardino, Public Works	Mike Grubbs	300 N. "D" Street, 3rd Floor	San Bernardino, CA 92418	92418
City of Yucaipa	John McMains, Community Dev	34272 Yucaipa Boulevard	Yucaipa, CA 92399	92399
Colton Public Library	Reference Librarian	656 North 9th Street	Colton, CA 92324	92324
Colton Unified School District	James Downs	1212 Valencia Drive	Colton, CA 92324	92324
Corona Norco Unified School District	Kent Belcher	2820 Clark Avenue	Norco, CA 92860	92860
Corona Public Library	Reference Librarian	650 South Main Street	Corona, CA 92882	92882
County of Riverside, Environmental Health	Chuck Strey, Sr Public Health E	4080 Lemon Street, 2nd Floor	Riverside, CA 92501	92501
County of Riverside, Planning and Environmental Programs Department	Carolyn Syms-Luna	4080 Lemon Street, 12th Floor	Riverside, CA 92501	92501
County of Riverside, Transportation Department	Juan Perez, Director	4080 Lemon Street, 8th Floor	Riverside, CA 92501	92501
County of San Bernardino, Environmental Health Services	Daniel Avera	385 N. Arrowhead Ave., 2nd Floor	San Bernardino, CA 92415-01	92415
County of San Bernardino, Flood Control	Environmental Review	825 East Third Street	San Bernardino, CA 92415	92415
County of San Bernardino, Regional Parks	Jim Keller	777 East Rialto Avenue	San Bernardino, CA 92415-07	92415
Crafton Water Company	Mike Huffstutler	101 East Olive Avenue	Redlands, CA 92373-5249	92373
East Valley Water District	Kip Sturgeon	3654 E. Highland Avenue, Suite 18	Highland, CA 92346-2607	92346
East Valley Water District	Robert Martin	3654 E. Highland Avenue, Suite 18	Highland, CA 92346-2607	92346
Elsinore Valley Municipal Water District	Ronald E. Young	31315 Chaney Street	Lake Elsinore, CA 92531	92531
Federal Highway Administration	U.S. Dept of Transportation	650 Capitol Mall, Suite 4100	Sacramento, CA 95814	95814
Fontana Union Water Company, Inc	Gerlad Black	15966 Arrow St.	Fontana, CA 92335	92335
Fontana Union Water Company, Inc	Michael McGraw	15966 Arrow St.	Fontana, CA 92335	92335
Gage Canal	Ross Lewis	7452 Dufferin Avenue	Riverside, CA 92504	92504
Glen Avon Public Library	Reference Librarian	9244 Galena Street	Riverside, CA 92509	92509
Inland Empire Utilities Agency	Craig Parker	6075 Kimball Avenue	Chino, CA 91710	91710
Jurupa Community Services District	Eldon Horst	11201 Harrel Street	Mira Loma, CA 91752	91752
Jurupa Unified School District	Elliot Duchon	4850 Pedley Road	Riverside, CA 92509	92509
Lugonia Water Company	David Knight	101 East Olive Avenue	Redlands, CA 92374	92374
Marygold Mutual Water Company	Bill Stafford	9725 Alder Avenue	Bloomington, CA 92316	92316
Meeks & Daily Water Company/Agua Mansa Water C/O EVMWD	Julius Ma	31315 Chaney Street	Lake Elsinore, CA 92530	92530
Mentone Branch Library	Reference Librarian	1870 Mentone Boulevard	Mentone, CA 92359	92359
Metropolitan Water District of So. California	Harry Bannerman	700 North Alameda Street	Los Angeles, CA 90012-2944	90012
Morongo Band of Mission Indians	Environmental Review	49750 Seminole Drive	Cabazon, CA 92230	92230
Muscoy Mutual Water Company	William Braden	2167 Darby Street	San Bernardino, CA 92407	92407
Native American Heritage Commission	Dave Singleton	915 Capitol Mall, Room 364	Sacramento, CA 95814	95814
Omnitrans	Environmental Review	1700 West Fifth Street	San Bernardino, CA 92411	92411
Orange County Resources & Development Mgmt Dept	Bryan Speegle, Director	300 N. Flower Street	Santa Ana, CA 92703-5000	92703
Orange County Water District	Mike Markus	18700 Ward Street	Fountain Valley, CA 92708	92708

A=Agency; C=County; E=Env; I=Individual; L=Library; N=Native American; S=State
G:\2007\07-0377\SEIR-EIS\Distribution and Notices\Distribution List 8-3-11 updated.xlsx

Riverside-Corona Feeder Project
Distribution Schedule

Ramona Band of Cahuilla Mission Indians	Anthony Largo	56310 Hwy 371, Suite B	Anza, CA 92539	92539
Regional Water Quality Control Board, #8	Santa Ana Basin Region, CEQA	3737 Main Street, Suite 500	Riverside, CA 92501-3348	92501
Riverside County Airport Land Use Commission	John Guerrin	4080 Lemon Street, 9th Floor	Riverside, CA 92501	92501
Riverside County Clerk	M. Meyer	2724 Gateway Drive	Riverside, CA 92507-4277	92507
Riverside County Flood Control District	Warren D. Williams, Chief Engi	1995 Market Street	Riverside, CA 92501	92501
Riverside County Transportation Commission	Anne Mayer, Executive Director	4080 Lemon Street, 3rd Floor	Riverside, CA 92502-2208	92502
Riverside Highland Water Company	Don Hough	12374 Michigan Street	Grand Terrace, CA 92313-529	92313
Riverside Transit Agency	Michael McCoy, Senior Planner	1825 3rd St.	Riverside, CA 92507-3416	92507
Riverside Unified School District	Susan Rainey	3380 14th Street	Riverside, CA 92501	92501
Riverside-Corona Resource Conservation District	Environmental Review	4500 Glenwood Dr., Bldg. A	Riverside, CA 92501	92501
Rubidoux Community Services District	David Lopez	3590 Rubidoux Blvd	Rubidoux, CA 92509	92509
San Bernardino County Land Use Services Dept	Dena Smith, Director	385 N. Arrowhead Ave., 1st Floor	San Bernardino, CA 92415-01	92415
San Bernardino County Museum: Develop Monitoring Division	Kathleen Springer	2024 Orange Tree Lane	Redlands, CA 92374-2850	92374
San Bernardino County, Dept of Airports Administrative Office	Environmental Review	825 E Third Street, Room 203	San Bernardino, CA 92415-08	92415
San Bernardino County Transportation Department	Environmental Review	825 East Third Street	San Bernardino, CA 92415-10	92415
San Bernardino Municipal Water Department	Matt Litchfield	300 N. "D" Street, 5th Floor	San Bernardino, CA 92418	92418
San Bernardino Public Library	Reference Librarian	555 West 6th Street	San Bernardino, CA 92410	92410
San Bernardino Unified School District	Dr. Arturo Delgado	777 North "F" Street	San Bernardino, CA 92410	92410
San Bernardino Valley Municipal Water District	Randy Van Gelder	380 E. Vanderbilt Way	San Bernardino, CA 92408-27	92408
San Bernardino Valley Water Conservation District	Robert Neufeld	1630 W. Redlands Blvd., Suite A	Redlands, CA 92373	92373
San Bernardino Valley Water Conservation District	Walter J. Christensen, III	1630 W. Redlands Blvd., Suite A	Redlands, CA 92373	92373
San Manuel Band of Mission Indians	Ann Brierty, Environmental Dep	101 Pure Water Lane	Highland, CA 92346	92346
Santa Ana River Watermaster c/o SBVMWD	Sam Fuller	380 E. Vanderbilt Way	San Bernardino, CA 92408	92408
Santa Ana Watershed Project Authority	Mark Norton	11615 Sterling Avenue	Riverside, CA 92503-4979	92503
South Coast Air Quality Mgmt. District	Steve Smith	21865 Copley Drive	Diamond Bar, CA 91765-4182	91765
Southern California Agency Bureau of Indian Affairs	Environmental Review	1451 Research Park Drive, Suite 100	Riverside, CA 92507-2154	92507
Southern California Edison	CEQA Review	2244 Walnut Grove Ave., Rm 312	Rosemead, CA 91770	91770
State of California, Farm Bureau Federation, Environmental Affairs	Anthony Francois	1127 11th Street, Suite 626	Sacramento, CA 95814	95814
State Water Resources Control Board	Paul Lillebo	1001 "I" Street	Sacramento, CA 95814	95814
Terrace Water Company	Clyde Graham	1095 1/2 Stevenson Street	Colton, CA 92324	92324
U.S. Army Corps of Engineers - LA District Environmental & Planning	Environmental Review	911 Wilshire Blvd., 14th Floor	Los Angeles, CA 90017	90017
U.S. Army Corps of Engineers - LA District Regulatory Branch	Crystal L. Marquez	911 Wilshire Blvd., Suite 980	Los Angeles, CA 90017	90017
U.S. Bureau of Reclamation	Doug McPherson, Env. Protecti	27708 Jefferson Ave., Suite 202	Temecula, CA 92593-0011	92593
U.S. Bureau of Reclamation	Amy J. Witherall, Water Resour	27708 Jefferson Ave., Suite 202	Temecula, CA 92593-0011	92593
U.S. Fish and Wildlife Service	CEQA Reviewer	6010 Hidden Valley Road	Carlsbad, CA 92011	92011
UC Center for Water Resources	Linda Vida, Director	3595 Canyon Crest Drive	Riverside, CA 92507	92507
University of California Riverside	Governmental Publications Dep	3401 Watkins Drive	Riverside, CA 92521	92521

A=Agency; C=County; E=Env; I=Individual; L=Library; N=Native American; S=State
G:\2007\07-0377\SEIR-EIS\Distribution and Notices\Distribution List 8-3-11 updated.xlsx

Riverside-Corona Feeder Project
Distribution Schedule

University of California, Riverside, Dept. of Anthropology	Eastern Information Center	1334 Watkins Hall	Riverside, CA 92521	92521
U.S. Dept of Agriculture/Natural Resources - Conservation Service	James Earsom	25864 Business Center Drive, Suite K	Redlands, CA 92374	92374
West Valley Water District	Anthony W. Araiza	855 West Baseline	Rialto, CA 92377	92377
Western Heights Mutual Water Company	Joe Calpino	32352 Avenue D	Yucaipa, CA 92399	92399
Western Municipal Water District	Jack Safely, PE, Director of Wa	14205 Meridian Parkway	Riverside, CA 92518	92508
Yucaipa Valley Water District	Joe Zoba	12770 Second Street	Yucaipa, CA 92399	92399
Inland Empire Waterkeeper	Environmental Review	3741 Merced Drive, Unit F2	Riverside, CA 92503	92503
California State Clearinghouse - Governor's Office of Planning & Research	Scott Morgan, Senior Planner	1400 Tenth Street, Suite 212	Sacramento, CA 95814	95814
Webb Associates internal copies	Cathy Perring			

A=Agency; C=County; E=Env; I=Individual; L=Library; N=Native American; S=State
G:\2007\07-0377\SEIR-EIS\Distribution and Notices\Distribution List 8-3-11 updated.xlsx

Section 4 Final Actions

CEQA

Board of Directors Action
Findings
Resolution
Notice of Determination

NEPA

Noticing and Record of Decision

Section 5 Mitigation Monitoring and Reporting Program

Section 5 Mitigation Monitoring and Reporting Program

Mitigation measures were incorporated into the Riverside-Corona Feeder ("RCF") Project to reduce potential significant environmental impacts identified in the Project Draft Supplemental Environmental Impact Report/Environmental Impact Statement ("SEIR/EIS"). Pursuant to Section 15097 (c) of the California Environmental Quality Act (CEQA) Guidelines, a written monitoring and reporting program has been compiled to verify implementation of adopted mitigation measures. "Monitoring" refers to the ongoing or periodic process of project oversight. "Reporting" refers to the written compliance review that will be presented to the responsible parties included in the table below. A report can be required at various stages throughout Project implementation or upon completion of the mitigation measure. The following table provides the required information which includes identification of the potential impact, the various mitigation measures, applicable implementation timing, identification of the agencies responsible in implementation, and the monitoring/ reporting method for each mitigation measure identified.

Additionally, as a result of comments on the Draft SEIR/EIS, modifications have been made to mitigation measures and four mitigation measures were added. None of these modifications or additions result in the conditions covered under *CEQA Guidelines* Section 15088.5, which would require recirculation of the Draft SEIR/EIS. They all represent either minor modifications that merely clarify the reduction of impacts clearly stated in the Draft SEIR/EIS. No new issues or additional environmental impacts will result from these changes.

Western Municipal Water District ("WMWD") will have the responsibility for implementing the measures and various public agencies will have the primary responsibility for enforcing, monitoring, and reporting the implementation of the mitigation measures. The required mitigation measures are listed and categorized by impact area, with an accompanying identification of the following:

- Impact Category
- Applicable Alternative
- Mitigation Measures
- Responsible Party – the agency to which reports involving feasibility, compliance, implementation, and development are made
- Monitoring/Reporting Method Action Indicating Compliance
- Verification of Compliance: Date complete, Signature and comments.

Acronyms Used in the MMRP

The following acronyms are used in the MMRP:

ACOE	U.S. Army Corps of Engineers
BATC	Basin Area Technical Advisory Committee
BMP	Best Management Practices
CAPCOA	California Air Pollution Control Officers Association
CAGN	California gnatcatchers
CARB	California Air Resources Board
CDFG	California Department of Fish and Game
CESA	California Endangered Species Act
DSF	Delhi sands flower-loving fly
ESA	Environmental Site Assessment
LBV	Least Bell's vireo
MLD	Most Likely Descendent
MMRP	Mitigation and Monitoring Reporting Program
MSHCP	Western Riverside County Multiple Species Habitat Conservation Plan
NAHC	Native American Heritage Commission
NPDES	National Pollutant Discharge Elimination System
PSE	Participating Special Entity
RCA	Regional Conservation Authority
RCF	Riverside-Corona Feeder Project
RTA	Rapid Transit Authority
SAS	Santa Ana sucker
SBAIC	San Bernardino Archaeological Information Center
SCAQMD	Southern California Air Quality Management District
SKR HCP	Stephens' Kangaroo Rat Habitat Conservation Plan
SWPPP	Stormwater Pollution Prevention Plan
SWWF	Southwestern Willow Flycatcher
USFWS	United States Fish & Wildlife Service
WMWD	Western Municipal Water District

IMPACT CATEGORY	APPLICABLE ALTERNATIVE	MITIGATION MEASURE	IMPLEMENTATION TIMING	RESPONSIBLE PARTY	MONITORING/REPORTING METHOD	DATE COMPLETE	SIGNATURE	COMMENTS
Aesthetics	All Alternatives	**MM Aes 1**(AES 1): Plants and trees removed or damaged by the proposed project shall be replaced pursuant to the standards and requirements of each jurisdiction within which the loss or damage occurs.	Encroachment permit or other approved by affected agency. Installation no later than 30 days after construction is complete.	WMWD Local affected agency approving and inspecting project.	Approved plans and final site inspection.			
	All Alternatives	**MM Aes 2** (AES 2): The location of all existing mature trees, palms, and other landscaping shall be noted on the construction drawings that will be prepared for this project to facilitate review and proper permitting by the affected jurisdiction. Generally, a mature wood tree is considered to have a diameter of 8-10 inches or more at 4½ feet off the ground. A palm tree is considered to be mature at 25 feet or more in height. Citrus trees are mature when commercial levels of fruit-bearing occur at about 5 to 7 years.	Plan preparation	WMWD	Plan approval by WMWD.			
	All Alternatives	**MM Aes 3** (AES 3): If construction activities that require digging are located closer than eight feet from a mature palm (over 25 feet in height), a certified arborist shall evaluate the specific palm(s) to determine if the palm can remain in place, be relocated successfully or if project redesign may be warranted. If the palm must be removed, replacement shall be pursuant to the requirements of the jurisdiction within which the palm(s) is/are located.	Prior to construction plan completion and as early in the design process as possible.	WMWD	Arborist to present WMWD with findings report to be incorporated into project design and landscape plans.			
	All Alternatives	**MM Aes 4** (AES 4): If construction activities that require digging are located closer than thirty feet from the drip line of a mature wood tree, a certified arborist shall evaluate the specific tree(s). The arborist will recommend the course of action most likely to preserve the tree including but not limited to trimming to help with stability, no action and the tree remains in place as is, project redesign, or the means to achieve a successful relocation. If the tree must be removed, replacement shall be pursuant to the requirements of the jurisdiction within which the tree(s) is/are located.	Prior to construction plan completion and as early in the design process as possible.	WMWD	Arborist to present WMWD with findings report to be incorporated into project design and landscape plans.			
	Preferred Alternative Only	**MM Aes 5:** To minimize the visual impact of a large reservoir/tank from public roads and hilltops in the vicinity, the Mockingbird Connection tank shall be buried and backfilled with dirt to where no more than three (3) feet of tank is visible. The top of the tank need not be buried, so as to allow for maintenance access. The disturbed and manmade slopes around the tank shall be stabilized and re-landscaped with a palette of plants consistent with the plant mix that is established as part of the revegetation requirements for the site, as determined by WMWD and the US Fish and Wildlife Service during Section 7 Consultation. Prior to the approval of grading plans, the grading and landscape plans for the reservoir/tank will be reviewed by WMWD and the City of	Prior to Grading	WMWD City of Riverside	Grading and landscape plans shall be reviewed.			

IMPACT CATEGORY	APPLICABLE ALTERNATIVE	MITIGATION MEASURE	IMPLEMENTATION TIMING	RESPONSIBLE PARTY	MONITORING/REPORTING METHOD	DATE COMPLETE	SIGNATURE	COMMENTS
		Riverside.						
	All Alternatives	**MM Aes 6:** To minimize the visual impact of above-grade facilities associated with pump/booster stations, all the pump/booster stations shall be enclosed and/or screened within a building, walls, or fencing, and with landscaping. Prior to building plans, pump enclosure plans and landscape plans will be reviewed by WMWD.	Pre-Construction	WMWD	Building, pump enclosure and landscape plans shall be reviewed.			
Air Quality	All Alternatives	**MM Air 1:** Prior to construction of the proposed improvements, the project proponent will provide a traffic control plan that will describe in detail safe detours around the project construction site and provide temporary traffic control (i.e. flag person) during earthen material transport and other construction-related truck hauling activities (10% reduction)[1].	Prior to construction with early consultation desired by jurisdiction(s) for each Reach. See **MM Trans 2**.	WMWD	Traffic Control Plan provided to each jurisdiction prior to construction. See **MM Trans 2**.			
	All Alternatives	**MM Air 2:** Prior to construction of the proposed improvements, arrangements will be made with Southern California Edison to facilitate the use of electricity from power poles as a primary source or power for stationary construction equipment, unless construction is occurring at locations where power poles are not available. If access to power poles is not available, the following options must be used to supply the power needs for construction: 1) use natural gas fueled generator sets; 2) use low emission, duel fueled generator sets; or 3) other low-emission power sources/supplies as appropriate and feasible.	During construction, but type of power source to be specified on construction plans.	WMWD	Construction drawing specifications, WMWD site inspections.			
	All Alternatives	**MM Air 3:** During construction of the proposed improvements, all mobile and stationary-construction equipment will be properly maintained at an off-site location including proper tuning and timing of engines (5% reduction)1. Equipment maintenance records and equipment design specification data sheets shall be kept on-site for the complete duration of construction.	During construction.	Contractor	Construction drawing specifications and WMWD inspections.			
	All Alternatives	**MM Air 3a:** Construction deliveries shall be consolidated and scheduled to off-peak hours to reduce congestion of local streets.	During construction	Contractor construction manager	Report to WMWD and included in Traffic Control Plan.			
	All Alternatives	**MM Air 4a:** To reduce fugitive dust emissions, the contractor shall provide WMWD with sufficient proof of compliance with Rule 403 and other dust control measures including, but not limited to: • requiring the application of non-toxic soil stabilizers according to manufacturers' specifications to all inactive construction areas (previously graded areas inactive for 20 days or more, assuming no rain); • requiring all trucks hauling dirt, sand, soil, or other loose materials are to be covered or must maintain at least 2 feet of freeboard (i.e., minimum vertical distance between top of the	During construction	Contractor construction manager	Report to WMWD.			

IMPACT CATEGORY	APPLICABLE ALTERNATIVE	MITIGATION MEASURE	IMPLEMENTATION TIMING	RESPONSIBLE PARTY	MONITORING/REPORTING METHOD	DATE COMPLETE	SIGNATURE	COMMENTS
		load and the top of the trailer), in accordance with Section 23114 of the California Vehicle Code; • suspending all excavating and grading operations when wind gusts (as instantaneous gust) exceed 25 miles per hour over a 30-minute period; • post contact information outside the property for the public to call if specific air quality issues arise; • use SCAQMD Rule 1186 and 1186.1 certified street sweepers or roadway washing trucks when sweeping streets to remove visible soil materials, replace ground cover in disturbed areas as quickly as possible; and • install gravel bed trackout apron (3 inches deep, 25 feet long, 12 feet wide per lane and edged by rock berm or row of stakes) to reduce mud/dirt trackout from unpaved truck exit routes where appropriate (i.e., Mockingbird reservoir and booster station, Clay Street booster station).						
	All Alternatives	**MM Air 5:** To address the CAPCOA White Paper on CEQA and Climate Change (CAPCOA) MM E-1 and reduce energy use, high-efficiency pumps shall be used within the project facilities. Pumps shall be selected based on the optimal pump to use for the particular application (i.e., location, hydrology, size, purpose). This results in low energy use for the application. The project will use pumps that are as energy efficient as possible without sacrificing performance.	During construction	Contractor construction manager	Report to WMWD.			
	All Alternatives	**MM Air 6:** To reduce consumption due to all non-pumping related energy, solar generation is required for lights, timers, landscape irrigation systems, and all other non-pumping energy uses.	During construction	Contractor construction manager	Report to WMWD.			
	All Alternatives	**MM Air 7:** To reduce construction vehicle emissions, the bid specification packages for individual Project construction phases shall require the bidding company's fleet of off-road diesel-powered construction equipment greater than 25 hp to meet Tier 3 off-road emissions standards or better. Any emissions control device used by the contractor shall achieve Level 3 emissions reductions of no less than 85 percent for particulate matter, as specified by CARB regulations. The bidding company shall also provide certification that their fleet is in compliance with CARB's In-Use Off-Road Diesel Vehicle Regulation in effect at that time, or proof that the bidding company has applied to the SCAQMD SOON Program (and/or other applicable grant programs) to acquire funding assistance to bring it into compliance. During the bid process, proof of compliance shall be provided to WMWD, which shall include but is not limited to, CARB and/or SCAQMD operating permit(s), and other documentation such as a copy of	Prior to close of bidding process.	WMWD	Submittal of proof of fleet compliance.			

IMPACT CATEGORY	APPLICABLE ALTERNATIVE	MITIGATION MEASURE	IMPLEMENTATION TIMING	RESPONSIBLE PARTY	MONITORING/REPORTING METHOD	DATE COMPLETE	SIGNATURE	COMMENTS
		each unit's certified tier specification, BACT documentation, and/or other compliance documentation.						
Biological Environment	All Alternatives	**MM Bio 1:** In Reach A or Central Reach crossings of the Santa Ana River, the dewatering activities shall take place during the period from October 1 through the end of February. This is within the season when the dominant plant species of these riparian communities are dormant. Dewatering outside of this period could subject these communities to stress, desiccation, and potential defoliation. In addition, adherence to this suggested schedule avoids the generally accepted breeding chronology for nesting by the least Bell's vireo and southwestern willow flycatcher in southern California (USFWS b, Sogge et al.), obviating the need for focused surveys that may be required, due to the project's potential to have significant noise impacts to these two listed migratory species. This suggested schedule also avoids the breeding season of the federally listed arroyo toad, generally regarded as mid-March through July 1 (USFWS c), thereby avoiding potential impacts to this species as well. Impacts to the arroyo toad during the breeding season would be direct, including physical damage to mature individuals and interference with breeding activities. Should it not be feasible to adhere to this schedule, additional mitigation measures are required, as specified below.	Construction of Santa Ana River crossing Oct 1–Feb 28.	WMWD and Contractor	Construction drawing specifications. WMWD site inspection.			
	2005 Alternative Only	**MM Bio 2:** (Applicable to 2005 Project Alignment, only) Should the construction occur during the breeding season for the arroyo toad (March 15–July 1), a protocol-level survey shall be conducted at the Santa Ana River (Reach A), to determine presence/absence. If the arroyo toad is found to be present in the vicinity of Reach A, incidental take permits (through either Section 7 or Section 10) shall be applied for. The survey reports shall identify further measures to be taken to avoid or minimize adverse project effects to the protected species and their habitat.	Survey conducted throughout Mar 15–Jul 1 timeframe. (Six (6) surveys required in all.)	WMWD	Survey report. Section 7 permit, if required.			
	All Alternatives	**MM Bio 3a:** Should construction occur during the breeding season for the least Bell's vireo (LBV) or southwestern willow flycatcher (SWWF) (March 15 through September 15), protocol-level surveys shall be conducted prior to construction at the following locations: the Santa Ana River (Reach A and Central Reach), Spring Brook wash (Reach B), the riparian vegetation along the Mockingbird Canyon alignment (Reach E), potentially suitable habitat in the Northern Reach (as identified in the Glenn Lukos Associates, Inc. 2008 report), and the drainage located south of the Corona Landfill (Reach H); or presence can be assumed. If surveys document the presence of LBV	Flycatcher survey conducted May 15–Jul 17. (Five (5) surveys required in all.) Vireo survey conducted Apr 10–Jul 31. (Eight (8) surveys in all.)	WMWD and Contractor	Survey reports. Construction drawing specifications.			

IMPACT CATEGORY	APPLICABLE ALTERNATIVE	MITIGATION MEASURE	IMPLEMENTATION TIMING	RESPONSIBLE PARTY	MONITORING/REPORTING METHOD	DATE COMPLETE	SIGNATURE	COMMENTS
		and SWWF, impacts to LBV and SWWF would be mitigated below the level of significance when occupied riparian forest /woodland/scrub is fenced and direct impacts are avoided and construction within 500 feet of occupied habitat occurs only between September 15th and March 15th to avoid indirect impacts to nesting LBV. If avoidance is not feasible, a temporary noise barrier shall be used during construction, at the appropriate location(s), in coordination with CDFG and the USFWS. The noise barrier shall attenuate noise levels to 60 dBA or less, at the edge of breeding habitat. If surveys indicate that these species are not present, this measure will not be required. Additional or alternative measures to avoid or minimize adverse project effects to LBV and SWWF, as identified by the USFWD in Section 7 Consultation and CDFG, shall be implemented. However, if all avoidance measures cannot be implemented such that "take" of LBV and SWWF is avoided. Take Authorization from USFWS through Final Biological Opinion and Incidental Take Statement and from CDFG through issuance of a CESA ITP or compliance with Fish and Game Code Section 2080.1, will be obtained.						
	All Alternatives	**MM Bio 3b:** For the Santa Ana River (Central Reach), Spring Brook wash (Reach B), the riparian vegetation along the Mockingbird Canyon alignment (Reach E), potentially suitable habitat in the Northern Reach in Riverside County (as identified in the Glenn Lukos Associates, Inc. 2008 report), and the drainage located south of the Corona Landfill (Reach H) potential adverse effects to LBV and SWWF will be reduced to less than significant levels with WMWD participation in the MSHCP as a Participating Special Entity (PSE) and payment of MSHCP mitigation fees. If WMWD does not participate in the MSHCP as a PSE, compliance with **MM Bio 3a** in Riverside County is required.	Prior to impacts to Covered Species and their Habitats (Pursuant to Section 6.1.6 of the MSHCP)	WMWD Regional Conservation Authority (RCA)	Compliance with RCA conditions and payment of fees to RCA.			
	All Alternatives	**MM Bio 4a:** Should construction occur during the breeding season for the coastal California gnatcatcher (March 15 through September 15), a protocol-level survey shall be conducted prior to construction at Spring Brook wash (Reach B) and the Northern Reach (within Riverside County as identified in the Glenn Lukos Associates, Inc. 2008 report), in the vicinity of the proposed project; or presence can be assumed. Focused presence/absence surveys consist of either 1) six surveys conducted no less than one week apart between March 15 and June 30 or 2) nine surveys conducted no less than two weeks apart during the remainder of the year. Surveys must be conducted by a biologist who holds the appropriate Section 10(a)(1)(A) permit. Surveys in which the species is not detected are considered valid for one	Surveys can be conducted year-round. Number and duration varies by season.	WMWD and Contractor	Survey report. Section 7 permit, if required.			

IMPACT CATEGORY	APPLICABLE ALTERNATIVE	MITIGATION MEASURE	IMPLEMENTATION TIMING	RESPONSIBLE PARTY	MONITORING/REPORTING METHOD	DATE COMPLETE	SIGNATURE	COMMENTS
		year and should be repeated within one year of work commencing. If surveys document absence of CAGN no additional avoidance or minimization measures are required. If surveys document the presence of CAGN impacts to CAGN would be mitigated below the level of significance when occupied coastal sage scrub is fenced and direct impacts are avoided and construction within 500 feet of occupied habitat occurs only between September 1 and February 15 to avoid indirect impacts to nesting CAGN. If avoidance is not feasible, a temporary noise barrier shall be used during construction, at the appropriate location(s), in coordination with CDFG and the USFWS. The noise barrier shall attenuate noise levels to 60 dBA or less at the edge of breeding habitat. Additional or alternative measures to avoid or minimize adverse project effects to CAGN, as identified by the USFWS in Section 7 Consultation, shall be implemented. However, if all avoidance measures cannot be implemented such that "take" of LBV and SWWF is avoided. Take Authorization from USFWS through Final Biological Opinion and Incidental Take Statement and from CDFG through issuance of a CESA ITP or compliance with Fish and Game Code Section 2080.1, will be obtained.						
	All Alternatives	**MM Bio 4b:** For the Spring Brook wash crossing (Reach B) and Northern Reach of the project alignment in Riverside County potential adverse effects to CAGN will be reduced to less than significant levels with WMWD participation in the MSHCP as a PSE and payment of MSHCP mitigation fees. If WMWD does not participate in the MSHCP as a PSE, compliance with **MM Bio 4a** in Riverside County is required.	Prior to impacts to Covered Species and their Habitats (Pursuant to Section 6.1.6 of the MSHCP)	WMWD Regional Conservation Authority (RCA)	Compliance with RCA conditions and payment of fees to RCA.			
	All Alternatives	**MM Bio 5:** In addition to the use of the temporary noise barrier, a qualified on site noise monitor (approved by the local jurisdiction and WMWD) shall be present during all construction activities conducted near habitat that has been identified in the surveys to host the arroyo toad, least Bell's vireo, southwestern willow flycatcher, or coastal California gnatcatcher. The noise monitor shall ensure through on site noise meter readings that the temporary barriers are effective at reducing construction noise to 60 dBA or less. If 60 dBA is exceeded, the noise monitor shall work with the Contractor to make adjustments in the barriers or construction activities to reduce noise to 60 dBA or less.	During construction	Local jurisdiction and WMWD	Survey report. Section 7 permit, if required. Construction drawing specifications			
	All Alternatives	**MM Bio 6:** Construction staging areas shall be located outside of riparian areas and away from (to the greatest distance feasible) riparian areas.	Prior to construction	WMWD and Contractor construction manager	Location of staging areas provided on construction plans for review by WMWD.			

IMPACT CATEGORY	APPLICABLE ALTERNATIVE	MITIGATION MEASURE	IMPLEMENTATION TIMING	RESPONSIBLE PARTY	MONITORING/REPORTING METHOD	DATE COMPLETE	SIGNATURE	COMMENTS
	All Alternatives	**MM Bio 7:** Construction activities adjacent to riparian and/or wetland areas shall be minimized where feasible. If open cut trenching is used in the Spring Brook drainage crossings or Central Reach instead of boring, direct loss of wetlands may occur and permits and mitigation will be required. Such mitigation may include restoration on site, removal of invasive species, or off-site purchase. See **MM Bio 8**, below.	During construction	Project biologist	Survey report. Section 7 permit, if required. Construction drawing specifications.			
	All Alternatives	**MM Bio 8:** A formal jurisdictional delineation for potential State and Federal wetland impacts will be conducted at Reaches A and B or the Northern Reach.	Pre-construction	WMWD and Army Corp of Engineers, CDFG	Issuance of Section 404 Permit and/or 1602 Streambed Alteration Agreement, as applicable.			
	All Alternatives	**MM Bio 9:** A project-wide 1602 Streambed Alteration Agreement prepared in accordance with CDFG requirements shall be secured by WMWD as the jurisdictional delineation warrants and shall include mitigation measures that are sufficient to reduce direct and indirect impacts to riparian habitat to a level below significant. The Agreement may include some or all of the following: • Avoid impacts where possible by shifting the project location or construction timing; • Minimize impacts. • Remove invasive species. • Purchase off-site habitat credits. • Create and/or restore natural communities and prepare a monitoring and maintenance plan for these areas. • Avoid sensitive habitats by placing construction staging areas as far away from them as is feasible. • Limit construction activity to daylight hours to minimize potential impacts related to artificial lighting. • Require the presence of a qualified biological monitor during all construction activities that are within or near sensitive habitats and areas that have been identified to host the arroyo toad, least Bell's vireo, southwestern willow flycatcher, coastal California gnatcatcher, Stephens' kangaroo rat or San Bernardino kangaroo rat.	Pre-construction	WMWD	1602 Streambed Alteration Agreement.			
	All Alternatives	**MM Bio 10:** An ACOE Section 404 permit shall be secured as the jurisdictional delineation warrants. The Nation-wide Section 404 Permit will apply to the project for linear utility projects. The Corps may require the implementation of measures similar to those listed for the Section 1602 Streambed Alteration Agreement as part of the Section 404 Permit approval process. Implementation of these measures will mitigate potential impacts to the bed and banks of the Santa Ana River and any other jurisdictional drainage. (Applicable to 2005 Project Alignment, only) Should open-trenching techniques be utilized to	Pre-construction	WMWD and Army Corp of Engineers	Issuance of Section 404 Permit.			

IMPACT CATEGORY	APPLICABLE ALTERNATIVE	MITIGATION MEASURE	IMPLEMENTATION TIMING	RESPONSIBLE PARTY	MONITORING/REPORTING METHOD	DATE COMPLETE	SIGNATURE	COMMENTS
		install the pipeline across the Santa Ana River, consultation with the U.S. Fish and Wildlife Service will be initiated to determine whether or not the proposed project would result in significant impacts to Critical Habitat for the Santa Ana sucker. If warranted incidental take permits (through Section 7) shall be applied for. The U.S. Fish and Wildlife Service shall identify further measures to be taken to avoid or minimize adverse project effects to the protected species and their habitat.						
	All Alternatives	**MM Bio 11:** In conjunction with the ACOE Section 404 Permit, a Section 401 Water Quality Certification from the California Regional Water Quality Control Board shall be secured.	Pre-construction	WMWD and Regional Water Quality Control Board	Issuance of Section 401 Water Quality Certification.			
	All Alternatives	**MM Bio 12:** Any discharge into navigable waters, or "waters of the United States" shall also comply with the applicable provisions of Sections 301, 302, 303, 306, and 307 of the Federal Clean Water Act. Compliance with these provisions shall result in certification from the Regional Board that verifies that the project complies with all water quality standards.	During Construction and Operation	WMWD and local jurisdiction	Certification from Regional Board.			
		See **MM Water Qual 1** in Section 4.11, which replaces **MM Bio 13** from the 2005 PEIR.						
	All Alternatives	**MM Bio 14:** If WMWD does not participate in the MSHCP as a PSE and should open-trenching techniques be utilized to install the pipeline across the Santa Ana River, a protocol-level survey shall be conducted at the Santa Ana River (Reach A or Central Reach), to determine presence/absence of the Santa Ana River woolly-star, slender-horned spineflower, Chaparral sand-verbena, Parry's spineflower, Robinson's pepper-grass, smooth tarplant, prairie wedge grass, and /or California satintail, within suitable habitat in the construction footprint. If one or more of these plant species are found to be present in the footprint, incidental take permits (through Section 7) shall be applied for. The survey reports shall identify further measures to be taken to avoid or minimize adverse project effects to the protected species and their habitat. If WMWD does participate in the MSHCP as a PSE, a focused Narrow Endemic Plant Species Survey Area (NEPSSA) survey shall be conducted within suitable habitat in the project alignments (Central and Northern Reach and Reach H, La Sierra Pipeline, and Clay Street Connection).	Surveys may be conducted at various times. Prior to Section 7 Consultation take permit Or Prior to impacts to Covered Species and their Habitats (Pursuant to Section 6.1.6 of the MSHCP)	WMWD and USBR and Regional Conservation Authority (RCA), if applicable	Survey reports. Section 7 permit, if required, or Compliance with RCA conditions and payment of fees to RCA. Construction drawing specifications.			
	Realignment Alternatives	**MM Bio 15:** In San Bernardino County focused surveys shall be conducted within potentially suitable habitat for Chaparral sand-verbena, Parry's spineflower, Robinson's pepper-grass, and smooth tarplant within the central reach and for Parry's spineflower, Robinson's pepper-grass, and smooth tarplant within the Northern Reach (as identified in	Surveys during flowering season. Prior to construction of the Northern Reach where potential habitat exists.	WMWD Project biologist	Report. WMWD implements mitigation, if required.			

IMPACT CATEGORY	APPLICABLE ALTERNATIVE	MITIGATION MEASURE	IMPLEMENTATION TIMING	RESPONSIBLE PARTY	MONITORING/REPORTING METHOD	DATE COMPLETE	SIGNATURE	COMMENTS
		the Glenn Lukos Associates, Inc. 2008 report) by a qualified biologist during the flowering season of these species and prior to construction activities. If special status plant species are found to be present in the footprint, further measures as recommended by a qualified biologist shall to be taken to avoid or minimize adverse project effects to these species and their habitat.						
	Realignment Alternatives	**MM Bio 16a:** In San Bernardino County focused surveys shall be conducted within potentially suitable habitat for northwestern San Diego pocket mouse and Los Angeles pocket mouse in the Northern Reach (as identified in the Glenn Lukos Associates, Inc. 2008 report) by a qualified biologist during the appropriate season of these species and prior to construction activities. If these species are found to be present in the footprint, occupied habitat shall be fenced and avoided. If occupied habitat cannot be avoided further measures as recommended by a qualified biologist and in consultation with the California Department of Fish and Game shall to be taken to avoid or minimize adverse project effects to these species and their habitat.	Survey seasons vary, generally May 1 to September 15. Prior to construction of the Central and Northern Reaches where potential habitat exists.	WMWD's project biologist CDFG	Report. WMWD implements mitigation, if required.			
	Realignment Alternatives	**MM Bio 16b:** In Riverside County potential adverse effects to northwestern San Diego pocket mouse and Los Angeles pocket mouse in the Northern and Central Reaches (as identified in the Glenn Lukos Associates, Inc. 2008 report) will be reduced to less than significant levels with WMWD participation in the MSHCP as a PSE and payment of MSHCP mitigation fees. If WMWD does not participate in the MSHCP as a PSE, compliance with **MM Bio 16a** within Riverside County is required.	Prior to impacts to Covered Species and their Habitats (Pursuant to Section 6.1.6 of the MSHCP)	WMWD RCA	Compliance with RCA conditions and payment of fees to RCA.			
	Realignment Alternatives	**MM Bio 17:** If WMWD does not participate in the MSHCP as a PSE a pre-construction presence/absence surveys for western burrowing owl (BUOW) shall be conducted in suitable habitat along the Northern and Central Reaches and Monroe Alternative (as identified in the Glenn Lukos Associates, Inc. 2008 report). Surveys shall be conducted within 30 days prior to disturbance and in accordance with the California Department of Fish and Game and California Burrowing Owl Consortium guidelines. Take of active nests shall be avoided. Passive exclusion (use of one way doors and collapse of burrows) will occur if owls are present outside of the nesting season. (The nesting season is February 1 through August 31). If WMWD does participate in the MSHCP as a PSE, a focused survey for burrowing owl following current survey protocol (approved by RCA) shall be conducted in suitable habitat along the Northern and Central Reaches and Monroe Alternative (as identified in the Glenn Lukos	Within 30-days of construction Or Prior to impacts to Covered Species and their Habitats (Pursuant to Section 6.1.6 of the MSHCP)	WMWD and Project biologist RCA, if applicable	Survey report. WMWD implements mitigation, if required. Compliance with RCA conditions and payment of fees to RCA, if applicable.			

IMPACT CATEGORY	APPLICABLE ALTERNATIVE	MITIGATION MEASURE	IMPLEMENTATION TIMING	RESPONSIBLE PARTY	MONITORING/REPORTING METHOD	DATE COMPLETE	SIGNATURE	COMMENTS
		Associates, Inc. 2008 report).						
	Preferred Alternative Only	**MM Bio 18:** To offset the loss of burrowing owl foraging and burrow habitat from construction of the Mockingbird Tank and Clay Street Pump Station, a minimum of 6.5 acres of foraging habitat per pair or unpaired resident bird, shall be acquired and permanently protected if WMWD does not participate in the MSHCP as a PSE. The protected lands shall be adjacent to occupied burrowing owl habitat and at a location acceptable to CDFG. The project sponsor shall provide funding for long-term management and monitoring of the protected lands. The monitoring plan shall include success criteria, remedial measures, and an annual report to CDFG. Acquisition and protection of mitigation property shall be conducted in accordance with the CDFG Staff Report on Burrowing Owl Mitigation, October 17, 1995 and/or consultation with CDFG. If WMWD does participate in the MSHCP as a PSE, to offset the loss of occupied burrowing owl habitat conservation of habitat shall be provided in accordance with Species Accounts, Burrowing Owl Objective 5 and payment of MSHCP mitigation fees.	Pre-construction Or Prior to impacts to Covered Species and their Habitats (Pursuant to Section 6.1.6 of the MSHCP)	WMWD with CDFG RCA, if applicable	Proof of acquisition. Compliance with RCA conditions and payment of fees to RCA, if applicable.			
	Realignment Alternatives	**MM Bio 19:** In San Bernardino County within potentially suitable habitat in the Northern Reach (as identified in the Glenn Lukos Associates, Inc. 2008 report), presence of this species can be assumed or focused coastal California gnatcatcher (CAGN) surveys are required following United States Fish and Wildlife (USFWS) protocol. Focused presence/absence surveys consist of either 1) six surveys conducted no less than one week apart between March 15 and June 30 or 2) nine surveys conducted no less than two weeks apart during the remainder of the year. Surveys must be conducted by a biologist who holds the appropriate Section 10(a)(1)(A) permit. Surveys in which the species is not detected are considered valid for one year and should be repeated within one year of work commencing. If surveys document absence of CAGN no additional avoidance or minimization measures are required. If surveys document the presence of California gnatcatchers (CAGN) impacts to CAGN would be mitigated below the level of significance when occupied coastal sage scrub is fenced and direct impacts are avoided and construction within 500 feet of occupied habitat occurs only between September 1 and February 15 to avoid indirect impacts to nesting CAGN. If avoidance is not feasible additional measures to avoid or minimize adverse project effects to CAGN, as identified by the USFWS in Section 7	Pre-construction in the Northern Reach	WMWD Project biologist	Report. WMWD implements mitigation, if required.			

IMPACT CATEGORY	APPLICABLE ALTERNATIVE	MITIGATION MEASURE	IMPLEMENTATION TIMING	RESPONSIBLE PARTY	MONITORING/REPORTING METHOD	DATE COMPLETE	SIGNATURE	COMMENTS
		Consultation, shall be implemented.						
	Realignment Alternatives	**MM Bio 20a:** In San Bernardino County within potentially suitable habitat for Delhi sands flower-loving fly (DSF) in the northern reach of the project alignment (as identified in the Glenn Lukos Associates, Inc. 2008 report) focused surveys shall be conducted following USFWS protocol by a qualified biologist who holds the appropriate Section 10(a)(1)(A) permit. Presence/absence surveys consist of bi-weekly surveys from August 1 to September 20 for a two-year period within areas of suitable habitat. If surveys document the presence of DSF impacts to DSF would be mitigated below the level of significance when occupied habitat is fenced and direct impacts are avoided. If avoidance is not feasible additional measures to avoid or minimize adverse project effects to DSF and their habitat, as identified by the USFWS in Section 7 Consultation, shall be implemented. The additional measures may include, but not be limited to, some or all of the following: • Avoid impacts where possible by shifting the project location or construction timing. • Maintain construction sites in sanitary conditions at all times. • Avoid sensitive habitats by placing construction staging areas as far away from them as is feasible. • Place extracted, surplus, suitable Delhi sands in current DSF conservation areas/banks. • Harvest sands and provide to a habitat bank established for the DSF.	Pre-construction within the Northern Reach	WMWD USFWS Project biologist	Report. Result of Section 7 consultation.			
	Realignment Alternatives	**MM Bio 20b:** For the northern reach of the project alignment in Riverside County potential adverse effects to DSF will be reduced to less than significant levels with WMWD participation in the MSHCP (including compliance with Species Accounts, Delhi Sands flower-loving fly Objective 1B) as a PSE and payment of MSHCP mitigation fees. If WMWD does not participate in the MSHCP as a PSE, compliance with **MM Bio 20a** is required.	Prior to impacts to Covered Species and their Habitats (Pursuant to Section 6.1.6 of the MSHCP)	WMWD Regional Conservation Authority (RCA)	Compliance with RCA conditions and payment of fees to RCA.			
	Realignment Alternatives	**MM Bio 21a:** In San Bernardino County within potentially suitable habitat for the Santa Ana sucker (SAS) in the Central and Northern Reach of the project alignment (as identified in the Glenn Lukos Associates, Inc. 2008 report) focused surveys shall be conducted following USFWS protocol by a qualified biologist who holds the appropriate Section 10(a)(1)(A) permit. Focused surveys for SAS shall also include presence/absence of arroyo chub and Santa Ana speckled dace. If surveys document the	Pre-construction within the Northern Reach	WMWD USFWS Project biologist	Report. Result of Section 7 consultation.			

IMPACT CATEGORY	APPLICABLE ALTERNATIVE	MITIGATION MEASURE	IMPLEMENTATION TIMING	RESPONSIBLE PARTY	MONITORING/REPORTING METHOD	DATE COMPLETE	SIGNATURE	COMMENTS
		presence of SAS impacts to SAS would be mitigated below the level of significance when occupied habitat is fenced and direct impacts are avoided and Best Management Practices ensure that no change in water quality will occur during or after construction. If surveys document absence of SAS, arroyo chub, and Santa Ana speckled dace no additional avoidance or minimization measures are required. If avoidance is not feasible additional measures to avoid or minimize adverse project effects to SAS and their habitat, as identified by the USFWS in Section 7 Consultation, shall be implemented. The additional measures may include, but not be limited to, some or all of the following: • Avoid sensitive habitats by placing construction staging areas as far away from them as is feasible. • Avoid impacts where possible by shifting the project location or construction timing. • Construction sites should be maintained in sanitary conditions at all times. • Implementation of the mitigation measures for SAS would be expected to reduce potentially significant impacts to arroyo chub and Santa Ana speckled dace below a level of significance.						
	Realignment Alternatives	**MM Bio 21b:** For the Central and Northern Reaches of the project alignment in Riverside County, potential adverse effects to SAS will be reduced to less than significant levels with WMWD participation in the MSHCP as a PSE and payment of MSHCP mitigation fees. If WMWD does not participate in the MSHCP as a PSE, compliance with **MM Bio 21a** is required.	Prior to impacts to Covered Species and their Habitats (Pursuant to Section 6.1.6 of the MSHCP)	WMWD Regional Conservation Authority (RCA)	Compliance with RCA conditions and payment of fees to RCA.			
	All Alternatives	**MM Bio 22:** The removal of potential nesting vegetation of sensitive bird species will be conducted outside of the nesting season (February 1 to August 31) to the extent that this is feasible. If vegetation must be removed during the nesting season, a qualified biologist will conduct a nesting bird survey of potentially suitable nesting vegetation prior to removal. Surveys will be conducted no more than three (3) days prior to scheduled removals. If active nests are identified, the biologist will establish buffers around the vegetation containing the active nest (500 feet for raptors and 200 feet for non raptors). The vegetation containing the active nest will not be removed, and no grading will occur within the established buffer, until a qualified biologist has determined that the nest is no longer active (i.e., the juveniles are surviving independent from the nest). If clearing is not conducted within three days of a negative survey, the nesting survey must be repeated to confirm the absence of nesting birds.	Pre-construction if vegetation clearing occurs February 1 to August 31.	WMWD Project biologist	Report. WMWD implements mitigation, if required.			
	Preferred Alternative	**MM Bio 23:** Temporary impacts from construction	Pre-construction	WMWD	Proof of payment of SKR conservation			

IMPACT CATEGORY	APPLICABLE ALTERNATIVE	MITIGATION MEASURE	IMPLEMENTATION TIMING	RESPONSIBLE PARTY	MONITORING/REPORTING METHOD	DATE COMPLETE	SIGNATURE	COMMENTS
		activities and permanent impacts from development of the Mockingbird Tank site on occupied Stephens' kangaroo rat habitat will be mitigated through payment of the Riverside County Stephens' Kangaroo Rat Habitat Conservation Plan (SKR HCP) Mitigation Fees.			fees or acquisition of habitat as agreed upon by USFWS.			
	Preferred Alternative	**MM Bio 24:** Section 7 Consultation with USFWS or participation in the MSHCP as a Participating Special Entity (PSE) shall be completed for temporary impacts (both direct and indirect) from construction activities and permanent impacts from development of the Mockingbird Tank site on occupied California gnatcatcher habitat. Mitigation for the loss of occupied habitat will be achieved by acquisition of replacement habitat at a 1:1 ratio that is biologically equivalent to the property being disturbed, as agreed upon by USFWS or compliance with the MSHCP and payment of MSHCP mitigation fees.	Pre-construction Or Prior to impacts to Covered Species and their Habitats (Pursuant to Section 6.1.6 of the MSHCP)	WMWD RCA, if applicable	Proof of Section 7 consultation for gnatcatcher and acquisition of habitat as agreed upon by USFWS. Compliance with RCA conditions and payment of fees to RCA, if applicable.			
	All Alternatives	**MM Bio 25:** Should jack and bore (also known as horizontal directional drilling) techniques be utilized to install the pipeline under CDFG or U.S. Army Corps of Engineers jurisdictional waterways (such as the Santa Ana River), a Frac-Out Contingency Plan (included in Appendix D – Biological Resources of the SEIR/EIS) shall be implemented by the contractor for the duration of drilling activities.	Prior to construction when directional drilling is used under jurisdictional waterways. During construction if frac-out occurs.	Contractor/WMWD/ Biologist	Contractor shall provide proof to WMWD that pre-construction requirements have been met. Consult/report w/CDFG if frac-out occurs.			
Cultural Resources / Paleontology	All Alternatives	**MM Cult 1:** (CULT-3) In order to reduce potential significant impacts to historic and non-Native American archaeological and historic resources, full-time archaeological monitoring during excavations shall be conducted in sensitive areas (e.g., near the Santa Ana River crossing, Mockingbird Canyon and La Sierra), within undeveloped areas along the project alignment, near Riverside Highland Water facility site thought to be in the vicinity of Barton Road (north of Palm Avenue), at the Gage Canal crossing in the cities of Riverside and Grand Terrace, at the Railroad crossings (AT&SF Railroad Alignment and Southern Pacific Railroad), the Riverside Canal, at Victoria Avenue and Irving Street. The extent and duration of the archaeological monitoring shall be determined by a Secretary of the Interior qualified archaeologist who is also qualified by Riverside County or the San Bernardino Archaeological Information Center (SBAIC) located at the San Bernardino County Museum, as appropriate to the location of the portion of the Project to be under construction, once the construction schedule is defined for each reach of project construction. In the event of an accidental discovery, the archaeological monitor will comply with State *CEQA Guidelines* Section 15064.5.	If during construction resources are discovered.	Qualified Archaeological Monitor	On-site monitoring. Monitoring report shall be submitted to WMWD.			
	All Alternatives	**MM Cult 1a:** (CULT-1) If non-Native American archaeological or historic resources are discovered,	During Grading and/or Construction	Contractor construction manager	On-site monitoring. Archaeological Surveys shall be			

IMPACT CATEGORY	APPLICABLE ALTERNATIVE	MITIGATION MEASURE	IMPLEMENTATION TIMING	RESPONSIBLE PARTY	MONITORING/REPORTING METHOD	DATE COMPLETE	SIGNATURE	COMMENTS
		the local jurisdiction and land owner where the resources are found will be notified by WMWD. Depending on the nature of the resource, appropriate mitigation and monitoring will be developed by WMWD in conjunction with all affected parties and the on-site archaeologist, and may include such things as: • Documentation, removal, and curation at a local museum, federal repository or other appropriate steward agency. • Documentation and retention in place. • Further detailed archaeological studies to determine the nature and extent of the find. • Retention by the land owner. • Other measures agreed upon by the parties involved.		Qualified Archaeological Monitor	submitted to WMWD, if appropriate.			
	All Alternatives	**MM Cult 2:** (CULT-3) In response to comments from local tribes and to be sensitive to the cultural heritage of the tribes that have claimed an interest in the project area, the archaeological monitoring program shall be executed in conjunction with the tribes. As part of the preparation of the archaeological monitoring program, the interested tribes shall assist in determining which areas of the project alignment where undisturbed soils will be excavated should be considered to be Sensitive Areas requiring monitoring. For the purposes of this mitigation measure, "undisturbed soils" shall mean: soil which has never been previously excavated or disturbed for construction or other purposes, and soil that was previously excavated but for which no archaeological or Native American monitoring was performed. "Sensitive Areas" include, at a minimum: the Santa Ana River (San Bernardino County) Springbrook Wash (Riverside County and City) crossings, a natural area near Irving and Firethorn Streets (Mockingbird Canyon area) in the City of Riverside, and the La Sierra area. Prior to grading, WMWD shall enter into a Treatment and Monitoring Agreement for one paid monitor for each reach of project construction with the culturally affiliated tribe, as determined by WMWD. WMWD may seek the assistance of the Native American Heritage Commission (NAHC) in making the determination of cultural affiliation. To respond to the expressed desire of each tribe to monitor construction in sensitive areas and in the spirit of interagency cooperation, the Pechanga, Ramona, and San Manuel shall be notified by WMWD, prior to excavation activities.	If during construction resources are discovered.	WMWD, archaeologist, land owner, and local jurisdiction.	Archaeologist's report on monitoring activity. Documentation of resources, if required.			
	All Alternatives	**MM Cult 2a:** Additional tribes responded during the archaeological surveys performed for the Realignment	Prior to Grading	WMWD	Notification of Construction in Culturally Sensitive Areas shall be			

IMPACT CATEGORY	APPLICABLE ALTERNATIVE	MITIGATION MEASURE	IMPLEMENTATION TIMING	RESPONSIBLE PARTY	MONITORING/REPORTING METHOD	DATE COMPLETE	SIGNATURE	COMMENTS
		Alternatives. To respond to the expressed desire of these additional tribes to monitor construction in sensitive areas and/or be consulted if finds are made, and in the spirit of interagency cooperation, the Morongo Band of Mission Indians, Soboba Band of Luiseno Indians and Gabrieleno/Tongva San Gabriel Band of Mission Indians shall be notified by WMWD, prior to excavation activities.			submitted Native American tribes.			
	All Alternatives	**MM Cult 3:** (CULT-1) To ensure the proper disposition of cultural resources of interest to the tribes uncovered during excavation for the installation of the RCF Project, WMWD shall seek input from the tribes to develop a Discovery Plan for such dispersal that encompasses the tribes' desired treatment and disposition of Native American cultural resources, including human remains. After considering the tribes' input and recommendations, WMWD shall approve and finalize such a plan prior to grading. In the alternative, WMWD may choose to negotiate treatment and disposition within the Treatment Agreements entered into with the culturally affiliated appropriate tribe for each reach of construction. WMWD shall follow either the Discovery Plan or the Treatment Agreement for resources found on WMWD lands. Further, WMWD shall agree to present the plan and encourage land owners to follow the plan if cultural resources of interest to the tribes are found on land not owned by WMWD. In all cases, the actions of WMWD in its treatment of accidentally-discovered cultural resources shall be consistent with the requirements of CEQA Guidelines section 15064.5, the provisions of the Public Resources Code, and any other applicable state or federal law.	Prior to grading of the first phase of project construction.	WMWD after consultation with the tribal representatives.	Cultural Resources Disposition and Treatment Plan.			
	All Alternatives	**MM Cult 4:** If fossils are identified during excavation, a qualified paleontologist shall be contacted and permitted to recover and evaluate the find(s) in accordance with current standards and guidelines.	During Grading and/or Construction	Contractor construction manager Qualified Paleontological Monitor	Paleontological monitoring report shall be submitted to WMWD			
	All Alternatives	**MM Cult 4a:** Prior to site grading, a pre-grading meeting between a qualified paleontologist and the excavation and grading contractor shall be held to outline the procedures to be followed when buried materials of potentially significant paleontological resources have been inadvertently discovered during earth-moving operations. Should construction/development activities uncover paleontological resources, work shall be moved to other parts of the project site and a qualified paleontologist shall be contacted to determine the significance of these resources. If the find is determined to be significant, temporary avoidance or other appropriate measures shall be implemented.	Prior to Grading	Contractor construction manager Qualified Paleontological Monitor	Paleontological monitoring report shall be submitted to WMWD and the museum repository.			

IMPACT CATEGORY	APPLICABLE ALTERNATIVE	MITIGATION MEASURE	IMPLEMENTATION TIMING	RESPONSIBLE PARTY	MONITORING/REPORTING METHOD	DATE COMPLETE	SIGNATURE	COMMENTS
		Appropriate measures would include that a qualified paleontologist be permitted to recover and evaluate the find(s) in accordance with current standards and guidelines. Any significant fossil remains recovered in the field shall be prepared, identified, catalogued, curated, and accessioned into the fossil collections of the San Bernardino County Museum, or another museum repository complying with the Society of Vertebrate Paleontology standard guidelines; and the qualified paleontologist or qualified designee shall prepare a final report presenting an inventory and describing the scientific significance of any fossil remains accessioned into the museum repository. The report shall comply with the Society of Vertebrate Paleontology standard guidelines for assessing and mitigating impacts on paleontological resources and shall be submitted to Western Municipal Water District and the museum repository.						
	All Alternatives	**MM Cult 5:** (CULT-2) If human remains are uncovered at any time, all activities in the area of the find shall be halted by WMWD or its contractor and the County Coroner shall be notified immediately pursuant to CA Health & Safety Code Section 7050.5 and CA PRC Section 5097.98. If the Coroner determines that the remains are of Native American origin, the Native American Heritage Commission (NAHC) shall be notified by the Coroner. The NAHC will determine and notify the Most Likely Descendent (MLD). The MLD shall be allowed to inspect the site of the discovery. The MLD shall complete the inspection and make recommendations for treatment within 48 hours of notification by the NAHC.	During Grading and/or Construction	Contractor construction manager Riverside County Coroner	Implementation of CA Health & Safety Code Section 7050.5 and CA PRC Section 5097.98; and if the Coroner determines that the remains are of Native American origin, Section 15064.5(e) of the CEQA guidelines.			
	All Alternatives	**MM Cult 5a:** If a sacred site is encountered within the project alignment, WMWD will work with the tribes to avoid the site, if feasible.	If during construction resources are discovered.	WMWD, archaeologist, tribal monitor, land owner, and local jurisdiction.	Archaeologist's report on monitoring activity. Documentation of resources, if required. Revision to project if feasible.			
	All Alternatives	**MM Cult 6:** Plants and trees removed or damaged by the proposed project shall be replaced pursuant to the standards and requirements of each jurisdiction within which the loss or damage occurs.	Encroachment permit or other approved by affected agency. Installation no later than 30 days after.	WMWD Local affected agency approving and inspecting project.	Approved plans and final site inspection.			
	All Alternatives	**MM Cult 7:** The location of all existing mature trees, palms and other landscaping shall be noted on the construction drawings that will be prepared for this project to facilitate review and proper permitting by the affected jurisdiction. Generally, a mature wood tree is considered to have a diameter of 8-10 inches or more at 4 ½ feet off the ground. A palm tree is considered to be mature at 25 feet or more in height. Citrus trees are mature when commercial levels of fruit-bearing occur at about 5 to 7 years.	Plan preparation	WMWD	Plan approval by WMWD.			
	All Alternatives	**MM Cult 8:** If construction activities that require	Prior to construction plan	WMWD	Arborist to present WMWD with			

IMPACT CATEGORY	APPLICABLE ALTERNATIVE	MITIGATION MEASURE	IMPLEMENTATION TIMING	RESPONSIBLE PARTY	MONITORING/REPORTING METHOD	DATE COMPLETE	SIGNATURE	COMMENTS
		digging are located closer than eight feet from a mature palm (over 25 feet in height), a certified arborist shall evaluate the specific palm(s) to determine if the palm can remain in place, be relocated successfully, or if project redesign may be warranted. If the palm must be removed, replacement shall be pursuant to the requirements of the jurisdiction within which the palm(s) is/are located.	completion and as early in the design process as possible.		findings report to be incorporated into project design and landscape plans.			
	All Alternatives	**MM Cult 9:** If construction activities that require digging are located closer than thirty feet from the drip line of a mature wood tree, a certified arborist shall evaluate the specific tree(s). The arborist will recommend the course of action most likely to preserve the tree including but not limited to trimming to help with stability, no action and the tree remains in place as is, project redesign, or the means to achieve a successful relocation. If the tree must be removed, replacement shall be commensurate with the size and age of the tree being removed, pursuant to the requirements of the jurisdiction within which the tree(s) is/are located, and in no case shall replacement trees be less than 24-inch box size trees.	Prior to construction plan completion and as early in the design process as possible.	WMWD	Arborist to present WMWD with findings report to be incorporated into project design and landscape plans.			
	Realignment Alternative (Monroe Route Only)	**MM Cult 10:** In order to reduce impacts to historical resources along the Monroe Alternative route, jack-and-bore tunneling or a similar technique that does not impact a surface feature shall be used instead of traditional trenching techniques. This would protect impacts to features such as the Riverside Upper Canal (CA-RIV-4495H), Riverside Lower Canal (CA-RIV-4791H), RCF-6, and RCF-7.	During Grading and/or Construction	Contractor construction manager	Construction plans and specifications reviewed by WMWD.			
	Preferred Alternatives Only	**MM Cult 11:** In order to reduce impacts to historical resources associated with the Realignment Alternative with Additional Connections, new wells constructed as part of the Central Feeder Connection, shall be not be placed within the footprint of the historic house foundation site located on the southwest corner of the intersection of Nevada Street and San Bernardino Avenue or within the footprint of the Old Crown Jewel packinghouse site (Packing House Christian Academy) located on the southwest corner of the intersection of Alabama Street and San Bernardino Avenue.	Prior to construction plan review.	WMWD and project archaeologist	Approval of construction documents.			
	Realignment Alternative (Monroe Route Only)	**MM Cult 12:** (Applies to the Monroe Street alignment, only.) Prior to construction and if the Monroe Street Alternative route is for the Central Reach is selected, P-33-17542 and P-22-17543 must be evaluated for NRHP or CRHR eligibility and the appropriate mitigation measures developed and implemented, if needed. Mitigation measures could include such things as: • avoidance,	Pre-Construction	WMWD and project archaeologist	Survey and modified construction plans, if required.			

IMPACT CATEGORY	APPLICABLE ALTERNATIVE	MITIGATION MEASURE	IMPLEMENTATION TIMING	RESPONSIBLE PARTY	MONITORING/REPORTING METHOD	DATE COMPLETE	SIGNATURE	COMMENTS
		• modified construction techniques, or • documentation and removal.						
	All Alternatives	**MM Cult 13:** If the local jurisdiction where mature trees and landscaping are being removed does not have standards or tree replacement requirements, WMWD shall install 15-gallon trees or larger at a 1:1 replacement ratio and other landscaping similar to what was removed or damaged.	Encroachment permit or other approved by affected agency. Installation no later than 30 days after.	WMWD Local affected agency approving and inspecting project.	Approved plans and final site inspection.			
Energy	Preferred Alternative Only	**MM Energy 1:** Hydroelectric generating stations shall be constructed as part of the Mockingbird and Clay Street Connections pump station facilities.	Prior to plan approval	WMWD and Project Engineer	Review by WMWD to see that included on plans, if feasible.			
Groundwater Levels	All Alternatives	**MM GWL 2 (Revised):** To assure that ongoing management of the RCF is coordinated with management of the Basin Area as a whole, monitoring and adaptive management shall be employed. The RCF operations management plan will be developed and tested using the groundwater modeling employed by the Basin Area TAC (or its successor or assignee) on a annual basis. The groundwater flow and groundwater model(s) shall be used to predict the effects of project operations on the safe yield of the Basin Area. If the model(s) suggest that the replenishment and pumping regime of the proposed project operation would result in a water level reduction of greater than 10 feet, the project operation shall be modified to reduce impacts to less than significant levels.	On-going	WMWD	Annual report to the TAC for the San Bernardino Groundwater Basin.			
Groundwater Levels	All Alternatives	**MM GWL 3:** WMWD and the City of Riverside, within one year of certification of the EIR by the WMWD Board of Directors, shall enter into a Engineering and Operation Agreement that will facilitate annual review of volumes of water to be recharged, stored and/or extracted from the San Bernardino Basin Area (SBBA) by WMWD in as part of the Project to ensure consistency with the conjunctive use rules developed by the SBBA Basin Technical Advisory Committee, or govern conjunctive use operations in the absence of BTAC-developed rules. The Engineering and Operation Agreement shall develop and implement procedures intended to minimize groundwater level impacts at certain specified Riverside wells and determine water storage and extraction targets for the Project. To accomplish those purposes, the Engineering and Operation Agreement shall address the following areas: • Proposed water extractions of previously stored water and the consequent changes in groundwater levels at key wells; • The length of time that water will be stored within the SBBA before WMWD extracts the water; and	On-going	WMWD	Engineering and Operation Agreement			

IMPACT CATEGORY	APPLICABLE ALTERNATIVE	MITIGATION MEASURE	IMPLEMENTATION TIMING	RESPONSIBLE PARTY	MONITORING/REPORTING METHOD	DATE COMPLETE	SIGNATURE	COMMENTS
		• Methodology for accounting of water loss of water stored by WMWD in the basin, including but not limited to the determination of when water is no longer stored within the SBBA because of outflow from that basin, a loss corresponding to the amount of water lost to evaporation if recharge occurs in a spreading basin, and annual loss corresponding to the amount of water that flows out of the SBBA on the surface and below the surface (outflow). • Remedy if WMWD extracts water in excess of the agreed-upon limits set forth in the Engineering and Operation Agreement or in excess of what is stored in the SBBA.						
Groundwater Quality	All Alternatives	**MM GWQ 2 (Revised):** To assure that ongoing management of the RCF is coordinated with management of the Basin Area as a whole, monitoring and adaptive management shall be employed. **a)** The RCF operations management plan will be developed and tested using the groundwater modeling employed by the Basin Area TAC (or its successor or assignee) on an annual basis. Existing groundwater flow and groundwater quality model(s) shall be used to predict the effects of project operations on groundwater quality. The results of the modeling shall be presented to the BTAC. If the results indicate that the location of the pollution plumes will be shifted by project operations such that additional existing "clean" wells could become contaminated, WMWD shall modify planned operations to avoid the result or otherwise address the modeled situation to the satisfaction of the BTAC. Examples of operational modifications that could be used are provided in the following table. **b)** When a new well is drilled, indicator wells in the vicinity that could be affected by Project operation will be selected to become part of the annual operations management plan. If water quality testing at any indicator wells (which are already tested regularly) suggests that the replenishment and pumping regime of the proposed project operation is causing drinking water quality in a given well to become newly contaminated or to worsen due to the Project, production and/or spreading in the area(s) contributing to the contamination shall cease until	On-going	WMWD	Annual report to the TAC for the San Bernardino Groundwater Basin.			

		a remedy is identified and implemented. Such remedies may include but not be limited to the following:						

New Wells Drilled for Project Operations		
Treatment Option	First Priority Methods	Secondary Priority Methods
Avoidance	• Move or Avoid Production in a Contaminated Location	• Wellhead treatment
Wellhead Treatment[1]	• Chlorination or ozonation for disinfecting (required for all wells) • Ion Exchange for nitrates and other contaminants • Activated Carbon	• Reverse osmosis
Blending	• If multiple wells in proximity have varying levels of constituents, blending could occur to dilute contaminants to legal levels prior to distribution.	
Blending	• If multiple wells in proximity have varying levels of constituents, blending could occur to dilute contaminants to legal levels prior to distribution.	
Existing Wells at Risk of Contamination by Project Operations		
Treatment Option	First Priority Method	Secondary Priority Method
Careful Management	• Participate in ongoing conjunctive use management of the Basin so Project is a benefit to Basin health for a safe drinking water supply and for the ecological health of the watershed.	• Choose alternative production and/or spreading location(s) • Produce or spread at a different time of year • Install barrier wells
Blending	• If multiple wells in proximity have varying levels of constituents, blending could occur to dilute contaminants to legal levels prior to distribution.	
Alternative use of contaminated water	• Could be effective in areas where non-potable system or other non-potable use exists if affected well operator is provided with drinking water quality replacement water from another source.	

Hazards and Hazardous Waste / Materials	All Alternatives	**MM Haz 1:** Avoid sites and alternative alignments on or near environmentally contaminated property. If avoiding a particular site compromises physical engineering requirements, then the following mitigation measures shall be implemented to reduce environmental effects related to hazards as a result of the project to a level below significance.	Prior to project design	WMWD and Project Engineer	Report of current hazardous sites list provided to WMWD by project engineer.			
	All Alternatives	**MM Haz 2:** Check potential sites for listing on the most recent Hazardous Waste and Substances List	Prior to project design	WMWD and Project Engineer	Report of current hazardous sites list provided to WMWD by project			

		(List) provided by the San Bernardino County Division of Hazardous Materials and by the Riverside County Department of Environmental Health pursuant to Section 65962.5 of the Government Code. If a selected site is on the List, avoidance of that property will be the first consideration.			engineer.			
	All Alternatives	**MM Haz 3** (HAZ-4): If the selected future alignment traverses a site listed on the List and avoidance is not feasible or if there are other indications that a site could be contaminated (i.e., where pipeline alignment crosses railroad rights-of-way), a Phase 1 Environmental Site Assessment (ESA) will be prepared.	Prior to project design.	WMWD and Project Engineer	Phase I ESA report.			
	All Alternatives	**MM Haz 4:** If the Phase 1 ESA identifies possible contamination on the pipeline alignment, then recommended subsurface investigation measures listed in the Phase I ESA will be implemented. Based on subsurface investigations characterizing subsurface contamination, remediation measures shall be implemented for the applicable site or an alternative alignment will be chosen.	After Phase I ESA complete and prior to project design.	WMWD and Project Engineer	Project plans for WMWD review and approval.			
	All Alternatives	**MM Haz 5:** All environmental investigation and/or remediation shall be conducted under a Work plan approved by jurisdictional regulatory agencies overseeing hazardous waste cleanups. For the cities of Corona and Riverside, the local agencies are City of Corona Fire Department and City of Riverside Fire Department. For the Cities of San Bernardino, Colton and Grand Terrace, the enforcement agency is the County of San Bernardino Fire Department, Hazardous Materials Division. In the unincorporated Riverside County, the Department of Environmental Health administers a program for the purpose of monitoring establishments where hazardous waste is generated, stored, handled, disposed, treated, or recycled, and to regulate by the issuance of permits, the activities of establishments where hazardous waste is generated. For any jurisdiction that may not be or have access to a responsible party for this purpose, the California Department of Toxic Substances Control shall be used to provide oversight. (Draft SEIR/EIS, p. 4.8-25)	After Phase I ESA if avoidance is not possible.	WMWD and appropriate agency listed in **MM Haz 5**	Approved. Work plan.			
	All Alternative	**MM Haz 5a:** All environmental investigation and/or remediation shall be conducted under a Work plan approved by jurisdictional regulatory agencies overseeing hazardous waste cleanups. For the city of Redlands, the local agency is City of Redlands Fire Department. For the city of Rialto and County of San Bernardino, the enforcement agency is the County of San Bernardino fire Department, Hazardous Materials Division. For any jurisdiction that may not be or have access to a responsible party for this purpose, the California Department of Toxic Substances Control shall be used to provide oversight.	After Phase I ESA if avoidance is not possible.	WMWD and appropriate agency listed in **MM Haz 5**	Approved. Work plan.			
	All Alternatives	**MM Haz 6:** Prior to any excavation or soil removal	Prior to excavation if	Contractor and	Construction drawing specifications or			

		action on known contaminated sites, or if contaminated soil (i.e., soil with a visible sheen or detectable odor) is encountered, complete characterization of the soil will be conducted. Appropriate sampling shall be conducted prior to disposal of the excavated soil. If the soil is contaminated, it shall be properly disposed of it according to Land Disposal restrictions. If site remediation involves the removal of contamination, then contaminated material will need to be transported off-site to a licensed hazardous waste disposal facility. This may incrementally decrease the volume available at a hazardous waste disposal site or incrementally increase the emissions of a hazardous waste incinerator. These impacts are not considered significant. If the proposed project plans on importing soils to backfill the areas excavated, proper sampling shall be conducted to make sure that the imported soil is free of contamination.	contaminated soil known or encountered.	appropriate agency listed in **MM Haz 5**	work plan.			
	All Alternatives	**MM Haz 7:** If during construction of the project, soil and/or groundwater contamination is suspected, construction in the area shall cease and appropriate Health and Safety measures shall be implemented. The project proponent shall contact the respective jurisdictional enforcement agency (see **MM Haz 5**) to obtain the necessary information on appropriate measures and their implementation.	During construction, after Phase I ESA if avoidance is not possible.	WMWD and appropriate agency listed in **MM Haz 5**	Approved. Work plan.			
	All Alternatives	**MM Haz 8:** If the selected future alignment traverses a site listed on the List and avoidance is not feasible or if there are other indications that a site could be contaminated (i.e., where pipeline alignment crosses railroad rights-of-way), an electronic "sniffer" capable of detecting actionable levels of hydrocarbons shall be employed during excavation activities in proximity to the previously referenced sites in lieu of preparing a Phase 1 Environmental Site Assessment (ESA) as required in **MM Haz 3**. Should actionable levels of contaminants be encountered, these materials shall be removed and disposed of in accordance with applicable regulations or pursuant to **MM Haz 4** through **MM Haz 7**.	During construction.	Contractor	WMWD review of construction specifications to include "sniffer" at key locations.			
	All Alternatives	**MM Haz 9** (HAZ-1, 2 and 3): To reduce potentially hazardous conditions and minimize the impacts from the handling of potentially hazardous materials, the following shall be included in WMWD construction specifications for all construction projects covered by this SEIR/EIS: The contractor(s) shall enforce strict on-site handling rules to keep construction and maintenance materials out of receiving waters and storm drains. In addition, the contractor(s) shall store all reserve fuel supplies only within the confines of a designated construction staging area, and regularly inspect all construction equipment for leaks. The contractor(s) shall prepare a Health and Safety	Plans prior to construction. Implemented during construction.	WMWD and Contractor	WMWD review of construction specifications, contractor to implement in the field.			

		Plan. The plan shall include measures to be taken in the event of an accidental spill. The construction staging area(s) shall be designed to contain contaminants such as oil, grease, and fuel products so that they do not drain towards receiving waters or storm drain inlets.						
	Realignment Alternatives	**MM Haz 10:** A minimum of 45 days prior to commencement of the Central Reach construction projects and a minimum of 45 days prior to commencement of the Clay Street Connection construction projects, the manager of the Riverside Municipal Airport shall be consulted in order to determine whether construction activities and construction equipment will encroach into the 100-to-1 imaginary surface surrounding the Riverside Municipal Airport. If it is determined that there will be an encroachment into the 100-to-1 imaginary surface, a minimum of 30 days before the date of the proposed construction, Western Municipal Water District shall file a FAA Form 7460-1, *Notice of Proposed Construction or Alteration*, for the construction activity. If FAA determines that the project would potentially be an obstruction unless reduced to a specified height, WMWD will work with FAA to resolve any adverse effects on aeronautical operations. These could include things as, but not limited to: • The use of construction equipment that is short enough to avoid encroachment into the imaginary surface; • Alternative construction methods to avoid the use of cranes or other tall equipment; or • Construction at night when the airport is closed.	Minimum 45-days prior to construction of Central Reach and Clay Street Connection.	WMWD and Riverside Municipal Airport FAA	FAA certification of Form 7460-1, if applicable.			
	Realignment Alternatives	**MM Haz 11:** To avoid potential impacts resulting from temporary flight hazards within the Flabob Airport Influence Area, no construction equipment shall exceed 70 feet in height within the Northern Reach where it is located in Avalon Street south of the 60 Freeway, Mission Boulevard and Limonite Street.	During construction	Contractor	Construction equipment list provided to WMWD.			
Noise	All Alternatives	**MM Noise 1:** Based on the Acoustical Impact Analysis which shows that the 65 dBA Leq is slightly less than one-quarter mile from the pipeline alignment, a minimum of 30 days prior to commencement of construction projects for all reaches and facilities, Western Municipal Water District shall identify all noise-sensitive receptors (e.g., residential dwellings, hotels, hospitals, nursing homes, schools and libraries) located within one-quarter mile of the active construction area. If construction is planned to occur within one-quarter mile of a sensitive receptor, the hours of construction shall be limited to those that would cause the least noise disruption to the sensitive uses and in	Minimum 30-days prior to construction	WMWD or contractor	Proof of noticing to local jurisdiction within which project is located, may be a part of Traffic Control Plan, if appropriate.			

		consultation with the local jurisdiction. Mitigation could include such approaches as: • Allowing nighttime construction in commercial/industrial areas or adjacent to schools which operate only during the day • Prohibiting nighttime construction in residential areas • Time of year construction, such as during a school holiday week • If more than one sensitive receptor that might warrant opposite approaches to hours of operation is affected by the same construction location, the hours of construction allowed by local jurisdictions regulations shall apply. **MM Noise 1a**: For portions of the Project to be constructed within the city of Riverside, the need for traffic detours has been identified as a possibility for some locations. If it is determined, once a detailed project alignment is finalized with the City for each segment of construction pursuant to **MM Trans 3b**, that there is no other option but to detour a significant amount of traffic to a street along which sensitive receptors are located, additional noise impacts analysis shall be completed to identify site-specific mitigation measures that are appropriate to the location in question. Some such potential mitigation approaches are outlined in **MM Noise 1**; the mitigation determined feasible shall be included in the Traffic Control Plan which has to be approved by the City prior to its issuance of the Encroachment Permit.	Prior to the issuance of an Encroachment Permit	WMWD	Traffic Control Plan			
	Preferred Alternative Only	**MM Noise 2:** Although blasting does not exceed any noise standards because its duration is so short, as a courtesy to adjacent residents, Western Municipal Water District or its designee shall notify residences within one-quarter (1/4) of a mile of any areas that will require blasting, as to the timing and duration of any potential blasting activities associated with the project site. Notification shall take place between a minimum of five (5) and a maximum of ten (10) working days prior to anticipated blasting activities.	Between 5 and 10 working days prior to blasting	WMWD or contractor	WMWD review construction specifications for requirement. Provide proof of noticing to local jurisdiction within which blasting is required.			
	All Alternatives	**MM Noise 3** (NOISE-2): All equipment used during construction shall be muffled and maintained in good operating condition. All internal combustion engines shall be fitted with well maintained mufflers in accordance with manufactures' recommendations. Maintenance and equipment records shall be made available by WMWD upon request if local jurisdictions receive complaints. If records indicate that equipment does not meet the requirements of this measure, the equipment in question shall be services, retrofitted or replaced.	During construction	WMWD and Contractor	Maintenance and equipment records shall be made available by WMWD upon request if local jurisdictions receive complaints.			
	All Alternatives	**MM Noise 4** (NOISE-3): The buildings housing pump stations shall be insulated and contain sound	Prior to building plan review	WMWD	Approval of building plans by WMWD.			

		attenuation materials to meet local noise standards.						
Stormwater / Water Quality	All Alternatives	**MM Water Qual 1** (HYD-1): WMWD shall require contractors to implement a program of best management practices (BMPs) and best available technologies to reduce potential impacts to water quality that may result from construction activities. To reduce or eliminate construction-related water quality impacts before the onset of construction activities, the construction agent(s) shall obtain coverage under the National Pollutant Discharge Elimination System (NPDES) General construction permit. Construction activities shall comply with the conditions of this permit that include preparation of a stormwater pollution prevention plan (SWPPP), implementation of BMPs, and monitoring to insure impacts to water quality are minimized. As part of this process, multiple BMPs shall be implemented to provide effective erosion and sediment control. These BMPs shall be selected to achieve maximum sediment removal and represent the best available technology that is economically achievable. BMPs to be implemented as part of this mitigation measure shall include, but are not limited to, the following: a. Temporary erosion control measures such as silt fences, staked straw bales/wattles, silt/sediment basins and traps, check dams, geofabric, sandbag dikes, and temporary revegetation or other groundcover would be employed for disturbed areas to avoid water erosion. Stockpiled dirt could be covered, misted continuously, protected with three-sided temporary wind breaks or other means to avoid wind erosion. b. Storm drain inlets on the site and in downstream offsite areas shall be protected from sediment with the use of BMP's acceptable to the construction agent(s), local jurisdictions and the California Regional Water Quality Control Board, Santa Ana Region. c. Dirt and debris shall be swept from paved streets in the construction zone on a regular basis, particularly before predicted rainfall events. d. No disturbed surfaces shall be left without wind and water erosion control measures in place between October 15 and April 15, and when the winds exceed 25 MPH. The construction agent(s) shall file a Notice of Intent with the Regional Board and require the preparation of a SWPPP prior to commencement of construction. The construction agent(s) shall routinely inspect the construction site to verify that the BMP's specified in the SWPPP are properly installed and maintained. The construction agent shall immediately notify the contractor if there were a noncompliance issue and require immediate compliance. e. Controls on construction site dewatering shall be implemented. If possible, water generated as part of construction dewatering shall be discharged onsite such that there would be no discharge to surface waters. If discharge to surface waters were	Prior to construction	Contractor	Proof of NPDES Permit provided to WMWD			

		unavoidable, the construction agent shall obtain coverage under the NPDES General Dewatering Permit prior to commencement of construction. The provisions of this permit are sufficiently protective of water quality to ensure that impacts to surface waters would remain below significance thresholds. During dewatering activities, all permit conditions shall be followed. The construction agent(s) shall routinely inspect the construction site to verify that the BMP's specified in the SWPPP are properly installed and maintained. The construction agent shall immediately notify the contractor if there were a noncompliance issue and require immediate compliance.						
Transportation and Traffic	All Alternatives	**MM Trans 1:** Bus stops and signs temporarily removed or closed by the proposed project shall be replaced and posted pursuant to the standards and requirements of the affected transit agency.	Prior to implementation of the Traffic Control and Safety Plan (**MM Trans 2**).	WMWD	Transit agency review and concurrence with Traffic Control and Safety Plan.			
	All Alternative	**MM Trans 1a:** WMWD shall coordinate the potential temporary closure of bus stops with the affected public transit agency (RTA and/or Omnitrans) to set up and comply with a collection and storage procedure that safeguards any bus stop furniture, such as bus shelters, passenger waiting benches, trash receptacles and bus stop signage, that must be removed prior to commencement of individual construction projects.	Prior to completion of Traffic Control Plan	WMWD and transit agency	Traffic Control Plan provided to local transit agency.			
	All Alternatives	**MM Trans 2:** (See also **MM Trans 2a**) A Traffic Control and Safety Plan shall be prepared for each reach of construction. WMWD shall coordinate with affected transit agencies, schools, fire stations, and other affected local jurisdictions on the preparation of each Traffic Control and Safety Plan. Traffic Control and Safety Plans may include such things as adjusted hours of construction in certain locations, signs, flagmen, adequate notice of construction schedules, and cones or barriers to detour traffic. The Traffic Control and Safety Plan for each Reach shall be completed and notice/information given to affected sensitive sites at least 30-days prior to the anticipated disruption to be caused by construction.	Plan to be prepared and reviewed by affected agencies at the time of construction drawing review. Notice to affected properties 30 days prior to construction.	WMWD	Approved Traffic Control and Safety Plan.			
	All Alternative	**MM Trans 2a:** (TRAF-1 through TRAF 3 and TRAF-6): Based on the Traffic Impact Study Report and Traffic Impact Study Report Addendum prepared for the project, it is concluded that the traffic impacts generated from the installation of the pipeline will require implementation of mitigation which may include non-peak hour construction (AM peak hours are 7:00 a.m. to 9:00 a.m., PM peak hours are 4:00 p.m. to 6:00 p.m.), temporary lane closures, temporary lane shifts using channelizing devices, temporary signal phasing modifications, and detours to divert traffic through nearby streets. A Traffic Control and Safety Plan shall be prepared for each reach of project construction. To maintain traffic flow and reduce air quality impacts, Traffic Control and	Prior to construction	WMWD	Traffic Control Plan with relevant issues addressed, provided to all affected parties.			

		Safety Plans shall implement recommendations on pages 1-3 through 1-12 of the Traffic Study and 1-3 through 1-6 of the Traffic Study Addendum, and shall ensure that all vehicular/pedestrian/bike connections are maintained throughout the construction period and may include, but not be limited to, such things as: • identification of all roadway locations where special construction techniques (e.g., directional drilling or night construction) would be used to minimize impacts to traffic flow; • circulation and detour plans to minimize impacts to local street circulation. This may include the use of signing and flagging to guide vehicles through and/or around the construction zone; • procedures to limit lane closures during peak hours to the extent possible; • haul routes that would minimize truck traffic on local roadways to the extent possible; • detours for bicycles and pedestrians in all areas potentially affected by project construction; • procedures ensuring that open trenches subject to vehicular or pedestrian traffic would be covered at the end of each workday with metal plates capable of accommodating traffic; • the installation of traffic control devices as specified in the California Manual on Uniform Traffic Control Devices; • the installation of safety fencing, where needed, to protect pedestrians from construction areas; • applicable railroad safety and engineering guidelines that would be adhered to when installing pipeline within a railroad right-of-way, and by which all construction crews and project personnel would be trained on applicable railroad safety guidelines prior to commencing work within the railroad right-of-way; • procedures by which construction vehicles and equipment would not cross the tracks except at established public crossings or as specified by the applicable railroad company; • developed access plans to be implemented for highly sensitive land uses such as police and fire stations, transit stations, hospitals, and schools. The access plans would be developed with the facility owner or administrator. To minimize disruption of emergency vehicle access, affected jurisdictions shall be asked to identify detours for emergency vehicles, which will then be posted by the contractor. The facility owner or operator shall be notified in advance of the timing, location, and duration of construction activities and the locations of detours and lane closures; • procedures to store construction materials only in designated areas; • coordination with local transit agencies for temporary relocation of routes or bus stops in						

		work zones, as necessary; • plans to restore all roads disturbed during project construction to their preconstruction condition, pursuant to franchise agreements with an applicable jurisdiction; • provide dedicated turn lanes for movement of construction trucks and equipment on and off site; and • reroute construction trucks away from sensitive receptor areas.						
	All Alternatives	**MM Trans 3:** Prior to the commencement of each individual construction project, WMWD and its contractor shall consult with the affected local jurisdiction(s) in order to coordinate project construction with applicable Capital Improvement Projects, underground facilities and/or other known potential items needing to be taken into account during final design, plan specifications, and/or construction so that issues can be avoided and/or remedies included in the specifications that meet with each jurisdiction's requirements.	Prior to construction	WMWD and local jurisdiction	Traffic Control Plan with relevant issues addressed, provided to all affected parties.			
		MM Trans 3a: Project specifications for the portion of the Project construction that includes the intersection of Van Buren Boulevard and Arlington Avenue within the city of Riverside shall ensure the red light enforcement system is not impacted so that it remains operational. In addition, if the contractor anticipates impacts to the red light enforcement system anywhere within the city of Riverside, WMWD and its contractor shall consult with the City of Riverside Public Works Department, provide plans and proposed specifications including construction timing and duration, construction techniques to clearly identify potential impacts and to show that specifications ensure that such red light enforcement shutdowns are minimized during pipe installation.	Prior to construction	WMWD, Contractor, and City of Riverside Public Works Department	Construction Plans and Specifications			
		MM Trans 3b: For portions of the Project to be constructed within the city of Riverside, prior to the commencement of each individual construction project (i.e. portion of the whole Project), WMWD and its engineer shall consult with the Riverside Public Works Department and Planning Department regarding the detailed intended alignment. The intended alignment will be designed to minimize impacts to local business access to the greatest extent feasible. The Alignment Study will be adjusted/completed with City comments in mind and provided to City for review. To assure that all detailed issues associated with the detailed alignment are being addressed, 50% plans shall be provided to the City for review and comment. Issuance of the	Prior to construction	WMWD, Contractor, and City of Riverside Public Works and Planning Departments	Alignment Study and City of Riverside Encroachment Permit			

		Encroachment Permit will constitute the City's approval of plans, specifications, Traffic Control Plans and any other items required for approval of such.						
	All Alternatives	**MM Trans 4:** WMWD shall restrict all necessary lane closures or obstructions along the Reach on major roadways to off-peak periods in urbanized areas to mitigate traffic congestion and delays which would be caused by lane closures during construction and by exploratory excavations. Lane closures must not occur between 7:00 a.m. and 9:00 a.m. and between 4:00 p.m. and 6:00 p.m., or as directed in writing by the affected public agency. Alternatively, WMWD shall consider nighttime construction in areas where no residences are located within 500 feet, and where traffic impacts could be reduced by avoidance of daytime construction. WMWD shall have a Traffic Management Plan prepared by a registered Traffic Engineer for the Northern Reach, describing which traffic lanes would require closure based on the pipeline location within each street, and where night construction is proposed. This plan shall be approved by each affected local jurisdiction prior to construction and implementation by WMWD.	Prior to construction in the Northern Reach	WMWD and local jurisdiction	Traffic Control Plan with relevant issues addressed, provided to all affected parties.			
	All Alternatives	**MM Trans 5:** Prior to finalizing plans for individual construction projects, WMWD shall identify all land uses along the right-of-way where project construction may adversely affect vehicular access to driveways. Where practicable, WMWD shall install the pipeline in a street location or in a manner which minimizes access problems WMWD shall also develop construction scheduling in a manner that minimizes impacts to businesses or residential areas, scheduling construction to avoid the hours or days of the week during which businesses receive the most customers, and avoiding peak traffic times adjacent to residential areas.	Prior to construction	WMWD and local jurisdiction	Traffic Control Plan with relevant issues addressed, provided to all affected parties.			
	All Alternatives	**MM Trans 6:** WMWD shall give written notification to all landowners, tenants, business operators, and residents along the right-of-way of the construction schedule, and shall explain location and duration of the pipeline and construction activities within each street (e.g., which lane/s will be blocked, at what times of day, and on what dates). WMWD shall identify any potential obstructions to driveway access, and if necessary shall make alternative access provisions. The written notification shall include a toll-free telephone number for business coordination and shall encourage affected parties to discuss their concerns with WMWD prior to the start of construction so individual problems and solutions can be identified. Alternative access provisions shall include WMWD-provided signage and alternate parking as provided and approved by local agencies.	Prior to construction	WMWD and contractor	Traffic Control Plan and construction project schedule.			

	All Alternatives	**MM Trans 7:** WMWD shall submit the location of proposed staging area(s) to appropriate local jurisdictions for review and approval. WMWD shall state the size of the area, the purpose (e.g., storage of construction equipment and employee parking), the number of vehicles and pieces of equipments to be stored, and the duration (in number of days and number of hours per day) that each staging area will be used. Such areas shall be configured to minimize traffic interference.	Prior to construction	WMWD and local jurisdiction	Traffic Control Plan and/or construction documents with relevant issues addressed, provided to all affected parties.			
	All Alternatives	**MM Trans 8:** WMWD shall provide a shuttle bus service for construction workers from convenient off-street parking areas to the work sites to minimize traffic volumes and parking demand at the work sites. Sufficient off-street parking shall be provided at the bus service staging areas so that adjacent or nearby parking facilities are not adversely affected. Multiple staging areas shall be utilized, if necessary, to reduce traffic impacts on the roadways serving the staging areas. A plan for use of shuttle buses and parking areas shall be submitted to the affected local jurisdictions for review and written approval.	Prior to construction	WMWD and local jurisdiction	Traffic Control Plan with relevant issues addressed, provided to all affected parties.			
	Preferred Alternative Only	**MM Trans 9:** Based on the Traffic Impact Study Report Addendum prepared for the project, it is concluded that the traffic impacts generated from the installation of the pipeline at the Mockingbird Connection underneath Van Buren Boulevard shall utilize a jack and bore method of construction so that construction will not impact traffic. Construction shall be handled so as to continue to allow access to local residents.	During Grading and/or Construction	Contractor construction manager	Construction plans and specifications reviewed by WMWD.			
	All Alternatives	**MM Trans 10:** WMWD shall coordinate in advance with public transit agencies (RTA and Omnitrans) to avoid disruption to transit operations. Public transit agencies which operate bus routes on the roadways potentially affected by the proposed construction activities shall be informed in advance of the pipeline project and the potential impacts at the bus stop locations. Alternative pick-up/drop off locations shall be determined and signed appropriately. WMWD shall document coordination with transit agencies and provide documentation to the public agencies prior to the start of construction.	Prior to implementation of the Traffic Control and Safety Plan (**MM Trans 2**).	WMWD	Transit agency review and concurrence with Traffic Control and Safety Plan.			
	All Alternatives	**MM Trans 11:** WMWD shall provide alternative pedestrian/bicycle access routes and trails to avoid obstruction to pedestrian/bicycle circulation. Where existing pedestrian circulation routes or bike trials would be obstructed by pipeline construction, alternative access routes shall be identified in consultation with the local jurisdiction and signed/marked appropriately.	Prior to implementation of the Traffic Control and Safety Plan (**MM Trans 2**).	WMWD and local jurisdiction	Traffic Control and Safety Plan.			
	All Alternatives	**MM Trans 12** (TRAF-7): WMWD shall restore any impacted public street, sidewalks, bikeways and trails to their pre-construction condition, following	Encroachment permit or other approved by affected agency. Installation no later than 30	WMWD Local affected agency approving and	Approved plans and final site inspection.			

		completion of each individual construction project as mutually agreed between WMWD and the local jurisdiction prior to construction.	days after.	inspecting project.				
	All Alternatives	**MM Trans 13** (TRAF-4): Encroachment permits for all work within public rights-of-way shall be obtained from each involved agency prior to commencement of any construction. WMWD shall comply with all traffic control requirements of the affected local agencies.	Prior to construction	WMWD	Encroachment permit and Traffic Control Plan.			
	All Alternatives	**MM Trans 14** (TRAF-5): As required by local jurisdictions, the proposed pipeline shall be jacked under select major intersections to avoid traffic disruption and congestion.	Prior to construction	WMWD	Consultation with affected jurisdiction, review of plans by WMWD			

[1] Reductions attributed to certain mitigation measures are based on personal communication with Charles Blankson, AQMD staff, and the AQMD CEQA Handbook.

Section 6.0 Annotated Draft SEIR/EIS